CSI Solar Co., Ltd.
199 Lushan Road, SND, Suzhou, Jiangsu, China, 215129
P +1 519 837 1881
F +1 519 837 2550
Sales Inquiries Email: info@csisolar.com
Customer Support Email: service.ca@csisolar.com

This manual is subject to change without prior notification. Copyright is reserved.
Duplication of any part of this issue is prohibited without written permission.

Please adhere to the actual products in case of any discrepancies in this user manual.

CSI GRID-TIED PV INVERTER
INSTALLATION AND OPERATION MANUAL
CSI-25K-T480GL01-UB & CSI-30K-T480GL01-UB
CSI-36K-T480GL01-UB & CSI-40K-T480GL01-UB

Version 1.1, Release Date: 05,2021

CSI Solar Co., Ltd.
199 Lushan Road, SND, Suzhou, Jiangsu, China, 215129
www.csisolar.com

Important notes

- Product specifications are subject to change without notice. Every attempt has been made to make this document complete, accurate and up-to-date. Individuals reviewing this document and installers or service personnel are cautioned, however, that Canadian Solar reserves the right to make changes without notice and shall not be responsible for any damages, including indirect, incidental or consequential damages caused by reliance on the material presented including, but not limited to, omissions, typographical errors, arithmetical errors or listing errors in the material provided in this document.

- Canadian Solar accepts no liability for customers' failure to comply with the instructions for correct installation and will not be held responsible for upstream or downstream systems Canadian Solar equipment has supplied.

- The customer is fully liable for any modifications made to the system; therefore, any hardware or software modification, manipulation, or alteration not expressly approved by the manufacturer shall result in the immediate cancellation of the warranty.

- Given the countless possible system configurations and installation environments, it is essential to verify adherence to the following:
  - There is sufficient space suitable for housing the equipment.
  - Airborne noise produced depending on the environment.
  - Potential flammability hazards.

- Canadian Solar will not be held liable for defects or malfunctions arising from:
  - Improper use of the equipment.
  - Deterioration resulting from transportation or particular environmental conditions.
  - Performing maintenance incorrectly or not at all.
  - Tampering or unsafe repairs.
  - Use or installation by unqualified persons.

- This product contains lethal voltages and should be installed by qualified electrical or service personnel having experience with lethal voltages.

Contents

Contents

1. Introduction 5
1.1 Product Description 5
1.2 Unpacking and storage 6
1.2.1 Storage 8
2. Safety instructions 9
2.1 Safety symbols 9
2.2 General safety instructions 9
2.3 Notice for use 10
2.4 Protection Circuitry and Controls 11
3. Installation 12
3.1 Environmental considerations 12
3.1.1 Select a location for the inverter 12
3.1.1.1 Examples of correct and incorrect installations 13
3.1.2 Other environmental considerations 13
3.1.2.1 Consult technical data 13
3.1.2.2 Vertical wall installation 13
3.1.2.3 Avoiding direct sunlight 13
3.1.2.4 Air circulation 13
3.1.2.5 Flammable substances 14
3.1.2.6 Living area 14
3.2 Product handling 14
3.3 Installing the wire box 15
3.3.1 Installation 16
3.4 Wiring box configuration 20
3.5 DC connection 21
3.5.1 DC connection high voltage danger and overcharging notice 22
3.5.2 String sizing 22
3.5.3 Recommended fusing section for each channel or connection 22
3.5.3.1 Maximum allowable amperage per fuse and channel 22
3.5.4 Process of connecting DC wires to terminals 23
3.5.4.1 Using fuse terminal 23
3.6 Making connections to the AC side of the inverter 24
3.6.1 Connecting the inverter to the utility grid 25
3.6.2 Wiring procedure 25
3.7 Installing the inverter 26
3.8 External ground connection point 31
3.9 Module Level Rapid Shutdown (Optional) 31
4. Communication & Monitoring 32
4.1 RS485 33
4.1.1 Wiring a single inverter and daisy chain inverter 33
4.1.2 Maximum allowable inverters using RS485 33
4.1.3 120-ohm (Ω) resistor placement 33
5. Commissioning 34
5.1 Preliminary checks 34
5.1.1 DC Connections 34
5.1.2 AC Connections 34
5.1.3 DC configuration 34
5.1.3.1 VOC 34
5.1.3.1.1 Check string voltage 35
5.1.3.2 Leakage to ground 35
5.1.3.2.1 Detection of leakage to ground 35
5.1.4 AC configuration 36
5.1.4.1 Measure VAC 36
5.1.4.2 Phase rotation test 36
5.1.5 AC Secure inverter wiring box 36
5.2 Selecting the appropriate grid standard 37
5.2.1 Verifying grid standard for country of installation 37
5.3 Changing the grid standard 37
5.3.1 Procedure to set the grid standard 37
5.4 Setting a custom grid standard 40
6. Normal operation 41
6.1 Start-up procedure 41
6.2 Shotdown procedure 41
6.3 7” LCD front panel display interface 42
6.3.1 Main menu 44
6.4 Sub-menu “information” 44
6.5 Sub-menu “settings” 45
6.5.1 Setting time 46
6.5.2 Setting inverter address for communications 46
6.5.3 Current system version 47

Contents

6.6 Sub-menu “Advanced Info – Technicians only” 47
6.6.1 Alarm message 48
6.6.2 Running message 49
6.6.3 Version 49
6.6.4 Communication data 50
6.6.5 Daily energy 50
6.6.6 Monthly energy 51
6.6.7 Yearly energy 51
6.6.8 Total energy 52
6.7 Sub-menu “Advanced settings – Technicians only” 52
6.7.1 Select standard 53
6.7.2 Grid ON/OFF 56
6.7.3 Power control 57
6.7.4 Clear energy and restore factory settings 57
6.7.5 Calibrate 57
6.7.6 Reset password 58
6.7.7 Restart HMI 59
6.7.8 Special Settings 59
6.7.9 STD. Mode Settings 63
6.7.10 External EPM set 75
6.8 Arc fault current interrupt (AFCI) function 75
7. Maintenance 76
8. Troubleshooting 77
8.1 Current alarm – front LCD panel 77
8.1.1 Running messages 77
8.2 Alarm history 77
8.2.1 Viewing alarm history 77
8.3 Error messages 77
8.3.1 Troubleshooting guide 77
9. Appendices 82
10. Specifications 90

1. Introduction

1.1 Product Description

Canadian Solar Three Phase Inverters convert DC power from the photovoltaic (PV) array into alternating current (AC) power that can satisfy local loads as well as feed the power distribution grid.

This manual covers the four (4) Canadian Solar Three Phase Inverter models listed below:

CSI-25K-T480GL01-UB, CSI-30K-T480GL01-UB, CSI-36K-T480GL01-UB, CSI-40K-T480GL01-UB

NOTE

-**LSW** indicates integrated MLRS transmitter. -**LSW** models have two series.
-**SPRT** integrates Canadian Solar Sun spec Transmitter compatible with all Sunspec MLRS receivers.
-**RSS** integrates Tigo Transmitter compatible only with Tigo MLRS receivers.
-**SW** For any systems where the module level rapid shutdown function is not required or for transmitter located outside the inverter.

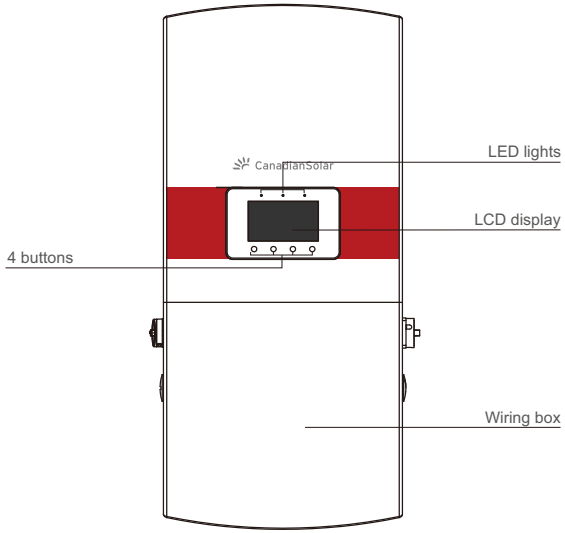

Figure 1.1 Front view

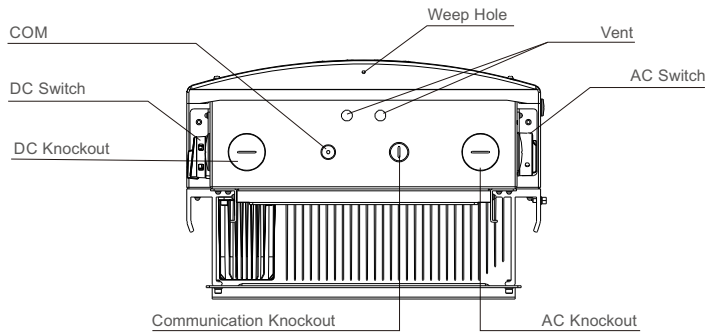

Figure 1.2 Bottom view

1.2 Unpacking and storage

The inverter and wire box ship in separate cartons. When unpacking, please verify all the parts listed below are included:

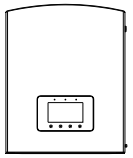

1-1

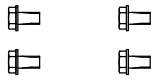

1-2

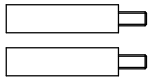

1-3

1-4

Part #	Description	Number	Remarks
1-1	Inverter Power Train	1	
1-2	Power Train packaging accessories	4	Hexagon bolt M6*12
1-3	Handle M10	2	
1-4	User manual	1	

Inverter power train packing list

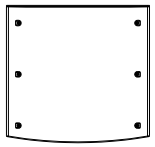

2-1

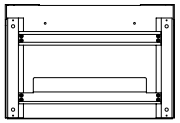

2-2

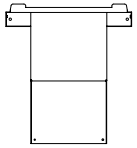

2-3

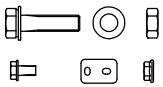

2-4

2-5

Part #	Description	Number
2-1	Inverter wire box	1
2-2	Wire box mounting plate	1
2-3	Power Train mounting plate	1
2-4	Wire box package accessories	1
2-4-1	Hexagon bolt M10*40	6
2-4-2	Flat Washer M10	6
2-4-3	Hexagon nut	6
2-4-4	Hexagon bolt M6*12	8
2-4-5	Lock plate	2
2-4-6	Hexagon flange nut	2
2-5	User manual	1

Inverter wire box packing list

NOTE

Fuses must be sized in accordance with local codes and must not exceed 20A. Exceeding inverter fuse rating could damage the inverter.

1.2.1 Storage

If the inverter is not installed immediately, storage instructions and environmental conditions are below:

- Use the original box to repackage the inverter, seal with adhesive tape with the desiccant inside the box.
- Store the inverter in a clean and dry place, free of dust and dirt. The storage temperature must be between -16 and 140 F (-26 - 60C) and humidity should be between 0 to 100%, non-condensing .
- Do not stack more than two (2) inverters high on a single pallet. Do not stack more than 2 pallets high.
- Keep the box(es) away from corrosive materials to avoid damage to the inverter enclosure.
- Inspect the packaging regularly. If packing is damaged (wet, pest damages, etc.), repackage the inverter immediately.
- Store inverters on a flat, hard surface -- not inclined or upside down.
- After 100 days of storage, the inverter and carton must be inspected for physical damage before installing. If stored for more than 1 year, the inverter needs to be fully examined and tested by qualified service or electrical personnel before using.
- Restarting after a long period of non-use requires the equipment be inspected and, in some cases, the removal of oxidation and dust that has settled inside the equipment will be required.

DO NOT STACK MORE THAN 2 HIGH

Figure 1.3

Improper use may result in electric shock hazards or burns. This product manual contains important instructions that are required to be followed during installation and maintenance. Please read these instructions carefully before use and keep them in an easily locatable place for future reference.

2.1 Safety symbols

Safety symbols used in this manual, which highlight potential safety risks and important safety information, are listed below:

WARNING
Symbol indicates important safety instructions, which if not correctly followed, could result in serious injury or death.

NOTE
Symbol indicates important safety instructions, which if not correctly followed, could result in damage to or the destruction of the inverter.

CAUTION, RISK OF ELECTRIC SHOCK
Symbol indicates important safety instructions, which if not correctly followed, could result in electric shock

CAUTION, HOT SURFACE
Symbol indicates safety instructions, which if not correctly followed, could result in burns.

2.2 General safety instructions

WARNING
Do not connect PV array positive (+) or negative (-) to ground – doing so could cause serious damage to the inverter.

WARNING
Electrical installations must be done in accordance with local and national electrical safety standards.

WARNING
To reduce the risk of fire, branch circuit over-current protective devices (OCPD) are required for circuits connected to the Inverter.

CAUTION
The PV array (solar panels) supplies a DC voltage when exposed to light.

CAUTION
Risk of electric shock from energy stored in the inverter's capacitors. Do not remove cover until five (5) minutes after disconnecting all sources of supply have passed, and this can only be done by a service technician. The warranty may be voided if any unauthorized removal of cover occurs.

CAUTION
The inverter's surface temperature can reach up to 75°C (167°F). To avoid risk of burns, do not touch the surface when the inverter is operating. Inverter must be installed out of the reach of children.

WARNING
The inverter can only accept a PV array as a DC input. Using any other type of DC source could damage the inverter.

2.3 Notice for use

The inverter has been constructed according to applicable safety and technical guidelines. Use the inverter in installations that meet the following requirements ONLY:

1). The inverter must be permanently installed.
2). The electrical installation must meet all the applicable regulations and standards.
3). The inverter must be installed according to the instructions stated in this manual.
4). The system design must meet inverter specifications.

To start-up the inverter, the Grid Supply Main Switch (AC) must be turned on, BEFORE the DC Switch is turned on. To stop the inverter, the Grid Supply Main Switch (AC) must be turned off before the DC Switch is turned off.

2. Safety Instructions

2.4 Protection Circuitry and Controls

To meet relevant codes and standards, the Canadian Solar three phase inverter line is equipped with protective circuitry and controls. These include Arc Fault Circuit Interrupter (AFCI) and Anti-Islanding Protection.

Arc Fault Circuit Interrupter AFCI:

Edition 2011 of the National Electrical Code®, Section 690.11, requires that all PV plants attached to a building are fitted with a means of detecting and interrupting serial electric arcs in the PV wiring and array. An electric arc with a power of 300W or greater must be interrupted by the AFCI in the time specified by UL 1699B. A triggered AFCI fault may only be reset manually. After clearing the source of the fault, the AFCI can be deactivated via the inverter front panel interface.

Anti-Islanding Protection:

Islanding is a condition where the inverter continues to produce power even when the grid is not present. Circuitry, along with firmware, has been designed to determine if the grid is present by adjusting the output frequency of the inverter. In the case of a 60Hz resonant system where the inverter is partially isolated from the grid, the inverter programming can detect if there is a resonant condition or if the grid is actually present. It can also differentiate between inverters operating in parallel and the grid.

3.1 Environmental considerations

3.1.1 Select a location for the inverter

When selecting a location for the inverter, consider the following:

WARNING:
Despite careful construction, electrical devices can cause fires.
- Do not install the inverter in areas containing highly flammable materials or gases.
- Do not install the inverter in potentially explosive atmospheres.

- The temperature of the inverter heat-sink can reach 167⁰F (75C).
- The inverter is designed to work in an ambient temperature range between -13⁰F to 140⁰F (-25 - 60C).
- If multiple inverters are installed on site, a minimum clearance of 20 inches should be kept between each inverter and all other mounted equipment. The bottom of the inverter should be at least 20 inches above of the ground or floor (see Figure 3.1).
- The LED status indicator lights and the LCD located on the inverter's front panel should not be blocked.
- Adequate ventilation must be present if the inverter is to be installed in a confined space.

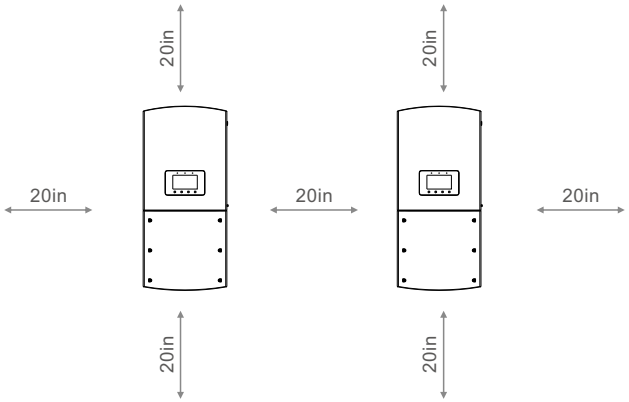

Figure 3.1 Distances required between inverters

NOTE
Nothing should be stored on or placed against the inverter.

3. Installation

3.1.1.1 Examples of correct and incorrect installations

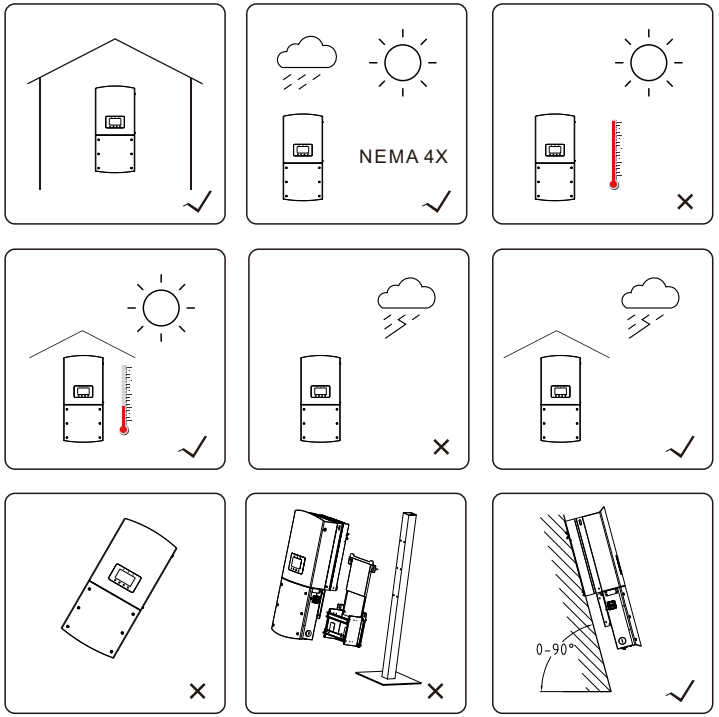

NOTE
Units with a fan may be mounted at 0 – 90 degrees off horizontal.

3.1.2 Other environmental considerations

3.1.2.1 Consult technical data

Consult the specifications section (section 9) for additional environmental conditions (protection rating, temperature, humidity, altitude, etc.).

3.1.2.2 Vertical wall installation

Canadian Solar inverters are typically convection cooled and must be mounted vertically (90 +/- 5 degrees off horizontal). Units with a fan may be mounted at 0 – 90 degrees off horizontal.

3.1.2.3 Avoiding direct sunlight

Installation of the inverter in a location exposed to direct sunlight should to be avoided.

Direct exposure to sunlight could cause:

- Power output limitation (with a resulting decreased energy production by the system).
- Premature wear of the electrical/electromechanical components.
- Premature wear of the mechanical components (gaskets) and user interface.

3.1.2.4 Air circulation

Do not install in small, closed rooms where air cannot freely circulate. To prevent overheating, always ensure that the air flow around the inverter is not blocked.

3.1.2.5 Flammable substances

Do not install near flammable substances. Maintain a minimum distance of three (3) meters (10 feet) from such substances.

3.1.2.6 Living area

Do not install in a living area where the prolonged presence of people or animals is expected. Depending on where the inverter is installed (for example: the type of surface around the inverter, the general properties of the room, etc.) and the quality of the electricity supply, the sound level from the inverter can be quite high.

3.2 Product handling

Please review the instructions below for handling the inverter and wire box:

1). The red circles below denote cutouts on the product package. Push in the cutouts to form handles for moving the inverter (see Figure 3.2).

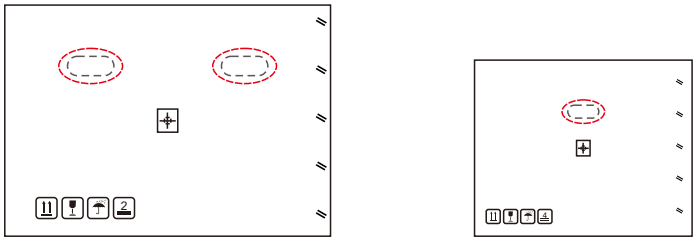

Inverter carton Wire box carton

Figure 3.2 Handles used to move the inverter shown circled in red

2). Two people are required to remove the inverter from the shipping box. Use the handles integrated into the heat sink to remove the inverter from the carton (see Figure 3.3). One person can remove the wire box from the shipping box. Use the handles integrated into the heat sink to remove it from the carton (see Figure 3.3).

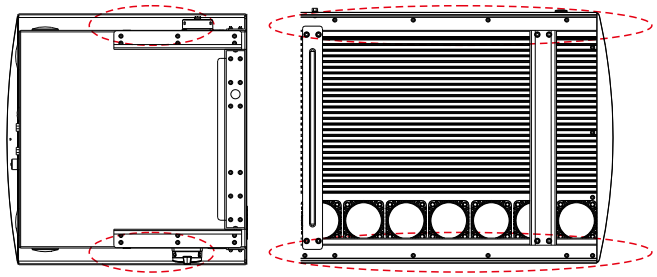

Wire box Inverter

Figure 3.3 Handles shown circled in red are used to remove the inverter and wire boxfrom the shipping box

WARNING

Due to the weight of the inverter, contusions or bone fractures could occur when incorrectly lifting and mounting the inverter. When mounting the inverter, take the weight of the inverter into consideration. Use a suitable lifting technique when mounting.

3.3 Installing the wire box

The inverter can be mounted to metal array racking. The mounting holes should be consistent with the size of the bracket or the dimensions shown in Figure 3.4. Before installation, please ensure the inverter and the wire box are not damaged and the quantity of the parts is correct.

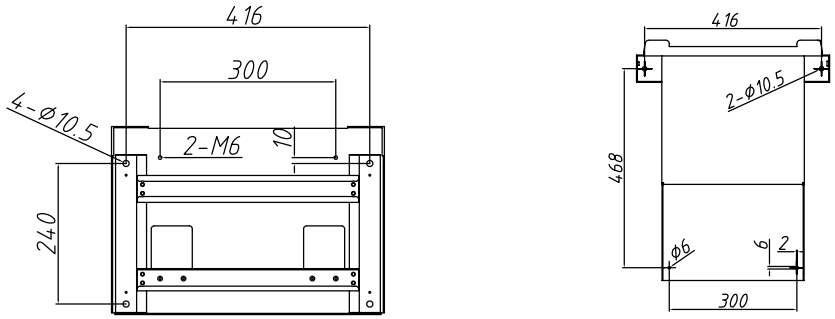

Wire box bracket Inverter bracket

Figure 3.4 Mounting bracket and dimensions

3. Installation

3.3.1 Installation

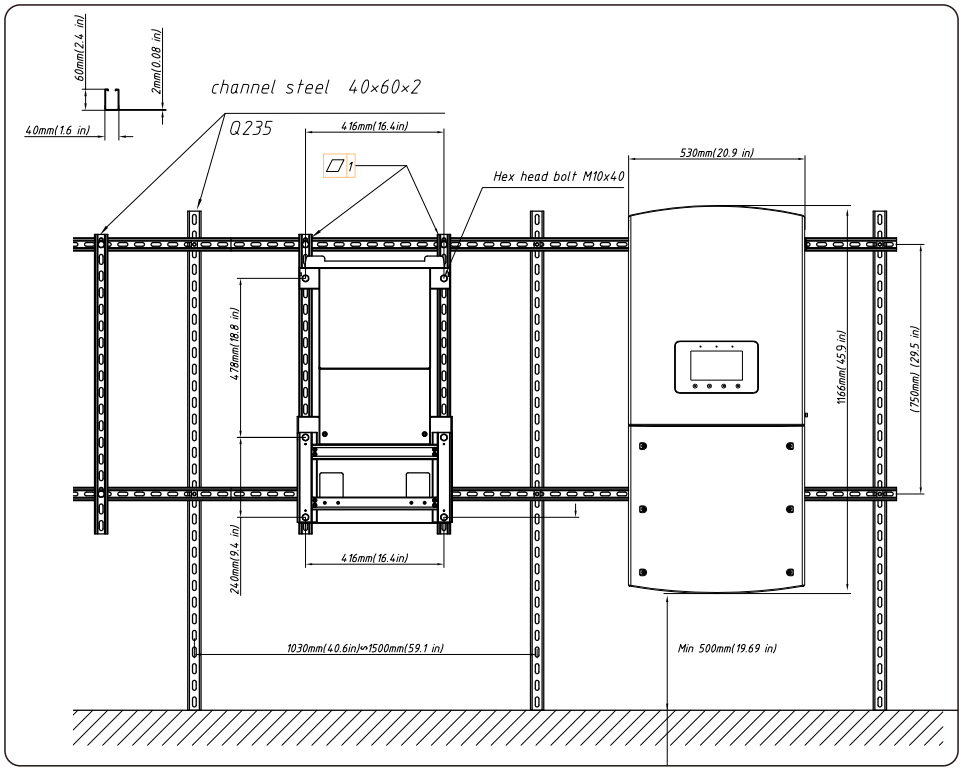

NOTE

If it is not installed on a faat wall, the inverter must be installed on a steel rack, and the steel rack must meet the following requirements:

a. Inverter mounting rack must be in the same plane, the mounting rack must not be twisted, bent or out of square, the flatness must be ≤1 mm.

b. The mounting rack must be equal to or stronger than the marked rack (40mm*60mm*2mm).

NOTE

Inverter must not be mounted on a post or pole.

Damage to inverter or mounting bracket may occur.

Inverter must be mounted on a frame as shown or on a wall or other flat surface.

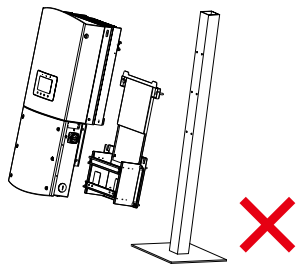

1). Installation of mounting wire box bracket: Use 4 sets hexagon head bolts M4*40, flat washer M10, nut M10 to attach the wire box bracket on the mounting rack. The tightening torque is 17.6-22.1 ft-lbs.

2). Installation of mounting Inverter bracket:

1.Put the inverter bracket onto the two M6 studs on the mounting rack, and use flange nuts to tighten, the torque is 2.9 ft-lbs.

2.Use 2 sets of hexagon head bolts M4*40, flat washer 10, nut M10 to attach the inverter bracket on the mounting rack. The tightening torque is 17.6-22.1 ft-lbs.

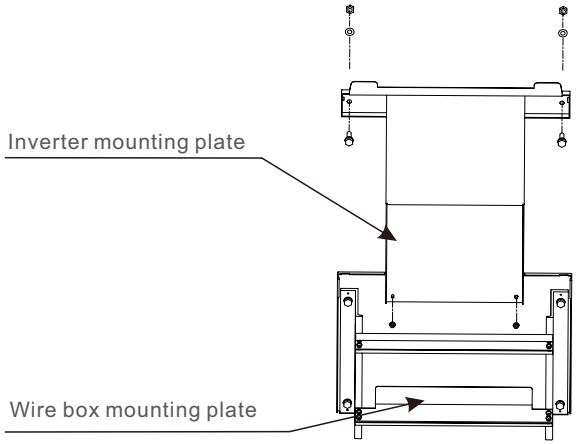

3). Hang the wire box on the mounting plate.

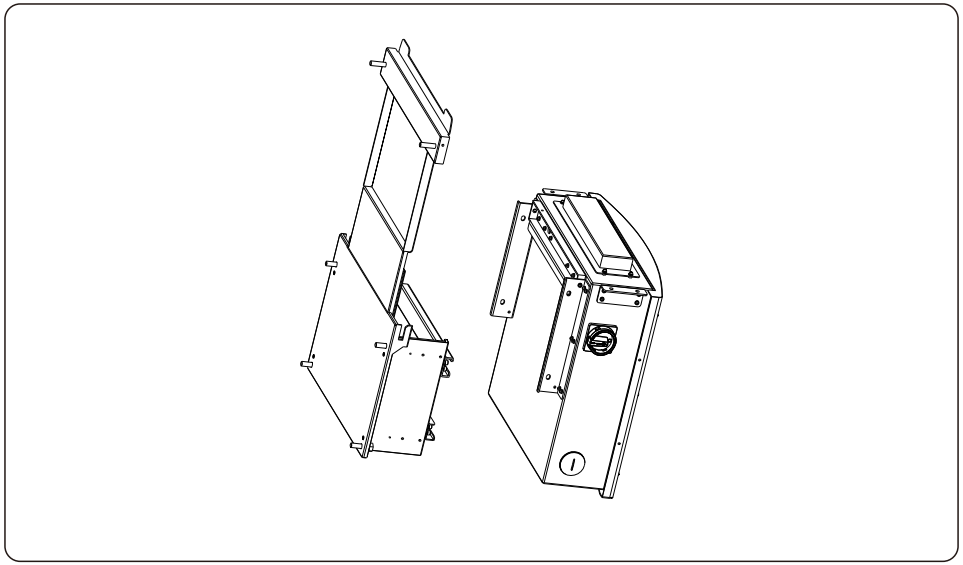

4). Attach the wire box with two M6 screws on both sides and tighten them, the torque is 2.9-4.4 ft-lbs.

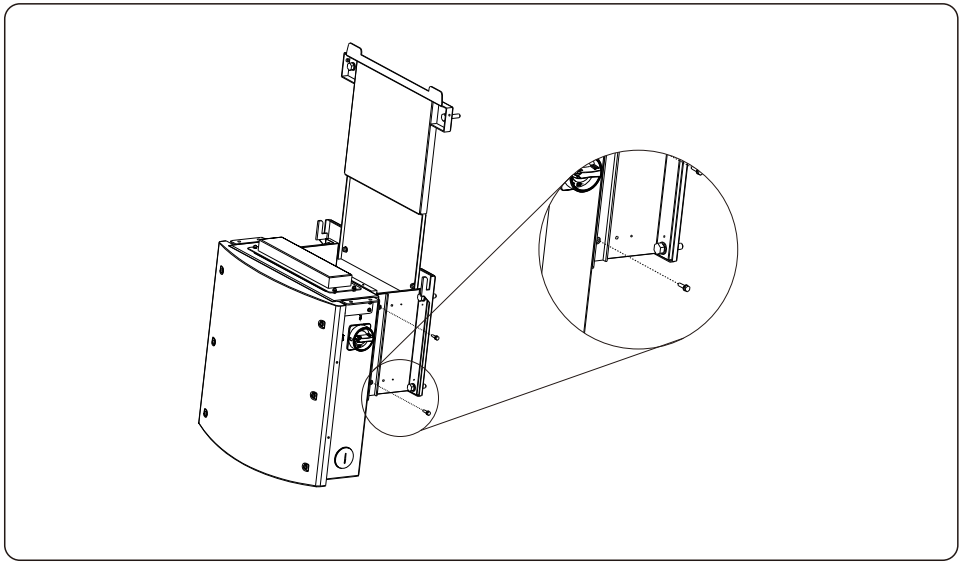

3. Installation

5). Use two M6 screws and locking plates on each side. Do not tighten as these will be used later.

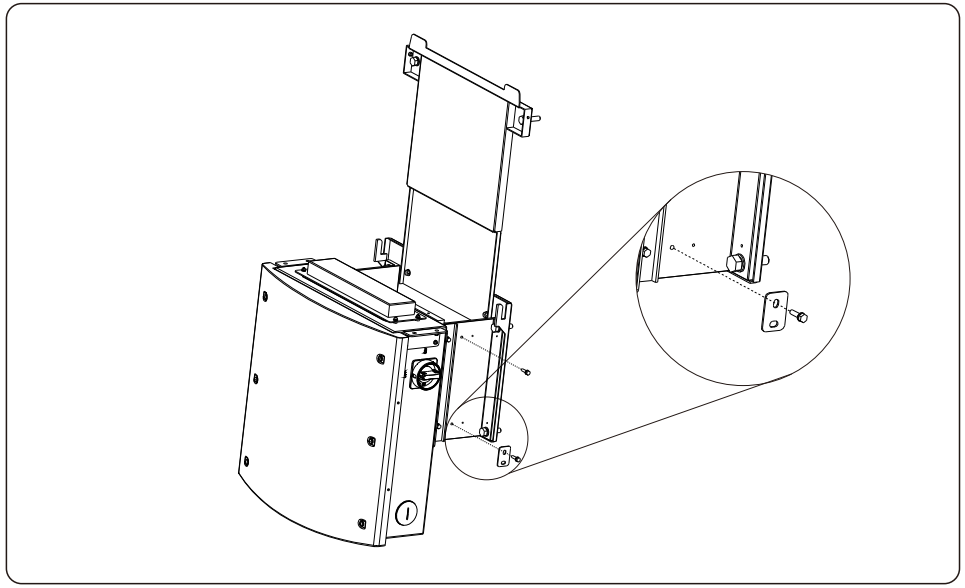

6). Unscrew the six M5 captive screws on the wire box cover, and remove the cover.

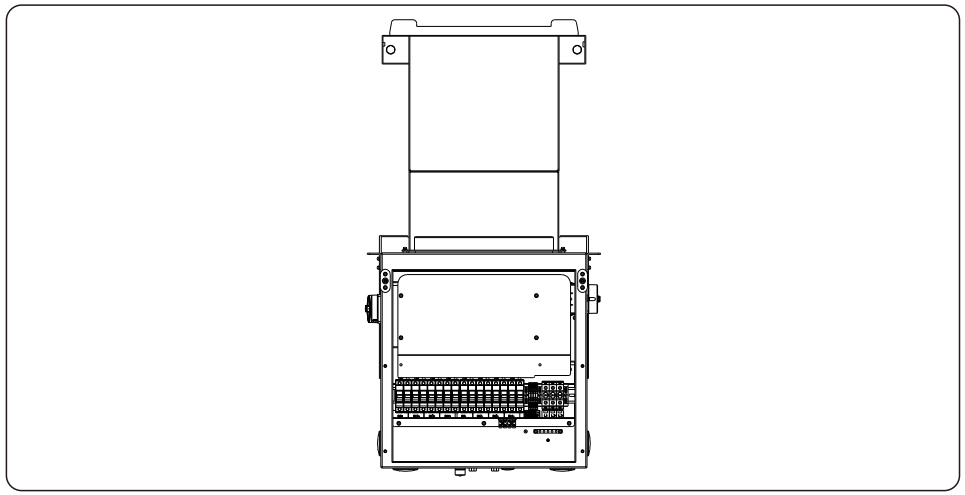

3.4 Wiring box configuration

The Canadian Solar Three Phase Inverter wiring box is designed for easy access to all connection terminals, including monitoring communication ports. The wire box features a spacious work area and pre-drilled 1-1/2 inch (ID) knockouts on the bottom and sides of the cabinet.

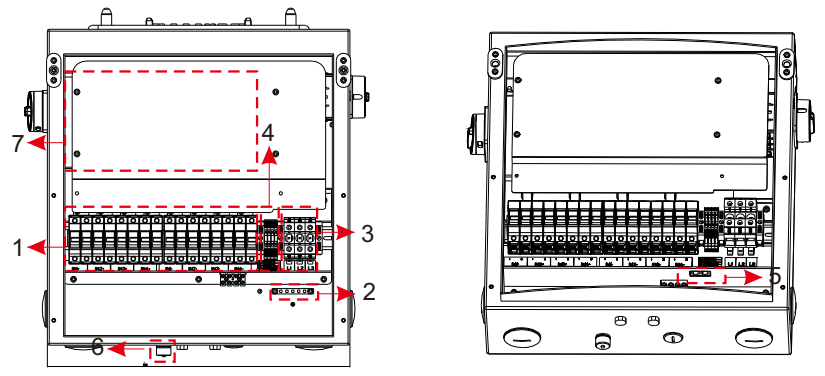

Figure 3.8 Inverter connection area of wiring box

	Parts	Connection	Cable size	Torque
1	DC terminal	PV strings	12-6 AWG	2.5 ft-lbs
2	Ground terminal	DC and AC ground	12-4 AWG	2.1 ft-lbs
3	Grid terminal	Grid	8-2 AWG	2.1 ft-lbs
4	RS-485 terminal	Communication cable	22-12 AWG	0.3-0.4 ft-lbs
5	RJ45 terminal	Communication cable	Network cable	NA
6	COM terminal	Wi-Fi stick	NA	NA
7	MLRSD Transmitter (inside)	NA	NA	NA

Table3.1 Connections list

3. Installation

3.5 DC connection

WARNING
Before connecting the inverter, make sure the PV array open circuit voltage is within the limit of the inverter. Otherwise, the inverter could be damaged.

WARNING
DO NOT connect the PV array positive or PV array negative cable to ground. This can cause serious damage to the inverter!

WARNING
MAKE SURE the polarity of the PV array output conductors matches the DC- and DC+ terminal labels before connecting these conductors to the terminals inside the inverter wiring box.

Caution:
If DC positive and negative connections are accidentally reversed (reverse polarity) or inverter is not powering on, DO NOT turn off the DC switch as it may damage the inverter or cause a fire.
The correct actions are:
*Use a clip-on ammeter to measure the DC string current.
*If it is above 0.5A, please wait until the current decreases to below 0.5A (sunset). String current above 0.5A is considered as under load.
*Only after the current is below 0.5A, you are allowed to turn off the DC switch and disconnect the PV strings.
Note: Damage due to wrong connections or fire caused by removing string wires or opening fuse holders under load is not covered in the device warranty.

See Section 9 for acceptable wire sizes and Figure 10.1 for screw torque values for the AC and DC connections.
Both the DC and AC ground wires can be connected to the grounding terminal block (see Figure 3.9).

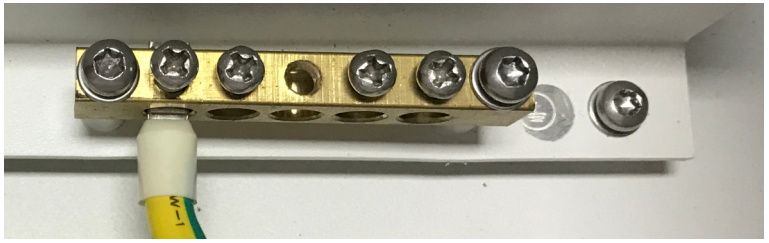

Figure 3.9 Grounding terminal block on the metal bracket

Requirements for the PV modules per MPPT input:

- All PV modules must be of the same type and power rating.
- All PV modules must be aligned and tilted identically.
- The open-circuit voltage of the PV array must never exceed the maximum input voltage of the inverter, even at the coldest expected temperature. (see Section 9 “Specifications” for input current and voltage requirements)
- Each string connected to a single MPPT must consist of the same number of series-connected PV modules.

3.5.1 DC connection high voltage danger notice

CAUTION
RISK OF ELECTRIC SHOCK

Do not touch an energized DC conductor. There are high voltages present when PV modules are exposed to light causing a risk of death due to an electric shock from touching a DC conductor! Only connect the DC cables from the PV module to the inverter as described in this manual.

CAUTION
POTENTIAL DAMAGE TO THE INVERTER DUE TO OVERVOLTAGE

The DC input voltage of the PV modules must not exceed the maximum rating of the inverter. (see Section 9 “Specifications”)
Check the polarity and the open-circuit voltage of the PV strings before connecting the DC cables to the inverter.
Confirm proper string length and voltage range before connecting DC cable to the inverter.

3.5.2 String sizing

For PV array sizing please refer Section 9 “Specifications” and utilize industry standard string sizing techniques as specified by your local code.

3.5.3 Recommended fusing section for each channel or connection

Canadian SolarThree phase inverters include an integrated wiring box which performs the combining of DC strings. The fuses and fuseholders in the wiring box are not rated to carry the current of multiple strings. Each DC string should be directly connected to the inverter. When using field combiners, the provided jumper bars must be used.

The sizing of the string fuses must take into account the two following conditions:

1). The nominal current rating of the selected fuse must not exceed the maximum fuse rating of the PV panels. Please refer to the applicable specifications for this value.
2). The fuse rating is determined based on the PV panel string current and on the sizing guidelines provided by the panel manufacturer or the local electrical code. Replace fuses with like size and type. Do not exceed 20A fuse rating.

3.5.3.1 Maximum allowable amperage per fuse and channel

Figure 3.10 Shows eight (8) input channels for connecting DC strings. Each channel is protected by a fuse. The included fuses are rated at 20A. Replace fuses with like size and type. Do not exceed 20A fuse rating.

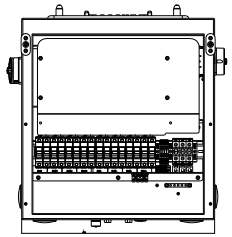

Figure 3.10 Eight (8) input channels

WARNING
If the amperage per connection is exceeded, the inverter could be damages. Ensure all wire sizing procedures are completed per local codes and regulations. Ensure the AC grid and DC PV array connections have enough separation to prevent contact with each other. Ensure the AC grid and DC PV array connections have enough separation to prevent contact with each other.

3.5.4 Process of connecting DC wires to terminals

3.5.4.1 Using fuse terminal

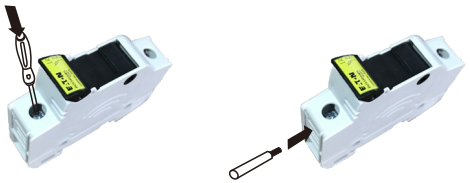

Figure 3.11 Fuse terminal

Loosen the screw to open wire cage. Strip cable insulation about ½ inch.
Check for proper string voltage and polarity. Do not close fuse holder until commissioning tests are completed.Insert the wire and tighten screw to secure wire. Torque to 2.5 ft-lbs.

3.6 Making connections to the AC side of the inverter

WARNING
An over-current protection device must be used between the inverter and the grid.

1). Connect the three (3) AC conductors to the three (3) AC terminals marked “L1”, “L2” and “L3”.Refer to local code and voltage drop tables to determine the appropriate wire size and type.
2). Connect the grounding conductor to the terminal marked “PE” (protective earth, the ground terminal).

Over-Current Protection Device (OCPD) for the AC side
To protect the inverter's AC connection line, we recommend installing a device for protection against over-current and leakage, with the following characteristics noted in Table 3.2:

NOTE
Use AL-CU transfer (bi-metallic) terminal or anti-oxidant grease with aluminum cables and terminals.

Inverter	Rated voltage(V)	Rated output power (kW)	Current rating for protection device (A)
CSI-25K-T480GL01-UB	480V	25	40
CSI-30K-T480GL01-UB	480V	30	50
CSI-36K-T480GL01-UB	480V	36	60
CSI-40K-T480GL01-UB	480V	40	60

Table3.2 Over-current protection device characteristics for Canadian Solar inverters

3.6.1 Connecting the inverter to the utility grid

All electrical installations must be carried out in accordance with the local standards and the National Electrical Code® ANSI/NFPA 70 or the Canadian Electrical Code® CSA C22.1.
The AC and DC electric circuits are isolated from the enclosure. If required by section 250 of the National Electrical Code®, ANSI/NFPA 70, the installer is responsible for grounding the system.
The grid voltage must be within the permissible range. The exact operating range of the inverter is specified in Section 9 “Specifications”.

3. Installation

3.6.2 Wiring procedure

CAUTION
RISK OF ELECTRIC SHOCK. Prior to starting the wiring procedure, ensure that the three-pole circuit breaker is switched off and cannot be reconnected.

NOTE
Damage or destruction of the inverter's electronic components due to moisture and dust intrusion will occur if the enclosure opening is enlarged.

CAUTION
Risk of fire if two conductors are connected to one terminal. If a connection of two conductors to a terminal is made, a fire can occur. NEVER CONNECT MORE THAN ONE CONDUCTOR PER TERMINAL.

Connect the cable to grid terminal as below:
1). Insert the conduit fitting into the opening and tighten the counter nut.
2). Attach the conduit to the fitting in the enclosure opening.
3). Insert the AC cable through the conduit into the inverter.
4). Strip the cable approximately 1/2 inch.
5). Release the terminal screws and insert the wire. Torque to 3NM.
6). Connect the equipment grounding conductor to the ground bar.
7). Connect the conductors to the AC terminals labeled L1, L2 and L3.
A neutral is not required for inverter operation.(see Figure 3.12).

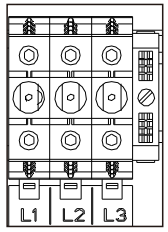

Figure 3.12

3.7 Installing the inverter

1). Remove the waterproof connector cover and put it in the space as shown.

Retain the four M4 screws by screwing into the screw holes on the mounting rack.

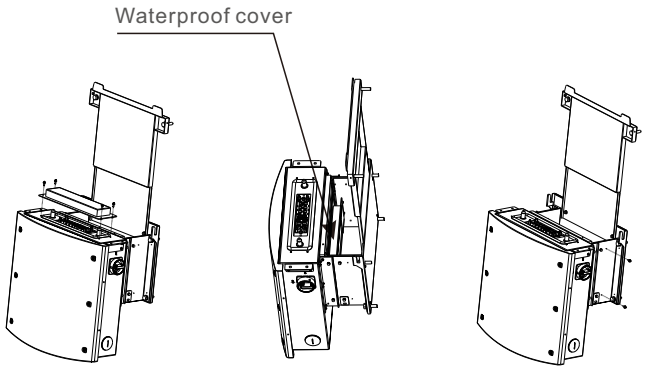

Figure 3.13

2). Loosen the M6 screws on both sides of the wire box. Do not remove the screws.

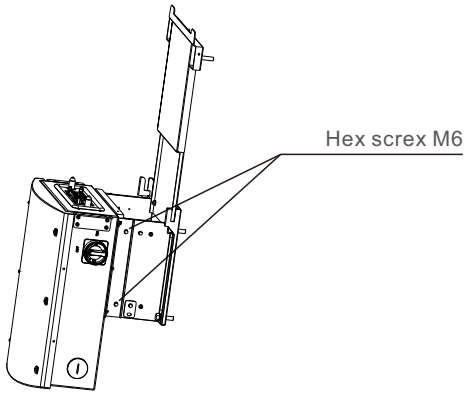

Figure 3.14

3). Lift the inverter power train, and hang it on the top of the mounting bracket.

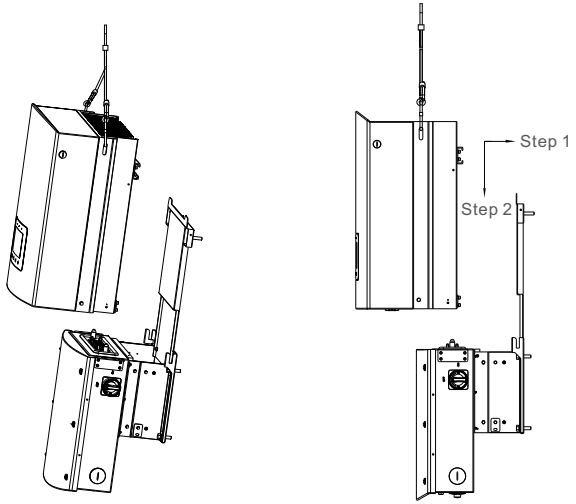

Figure 3.15

4). The positioning plate of inverter should insert into the positioning slot.

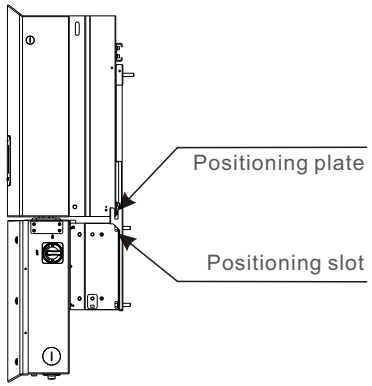

Figure 3.16

5). Use two M6 screws to attach the power train and wire box on both side, the torque is 1.2-1.4 ft-lbs.

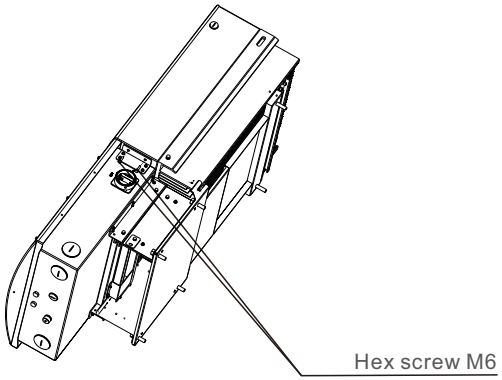

Figure 3.17

NOTE

Ensure the torque is correct. Too much torque will damage the inverter.

6). Remove the two M6 screws and locking plate on the wire box mounting rack,and use two M6 screws to attach the inverter and wire box on each side, the torque is 1.2-1.4 ft-lbs. Tighten the M6 screws loosened in Step 2, the torque is 2.9-4.4 ft-lbs.

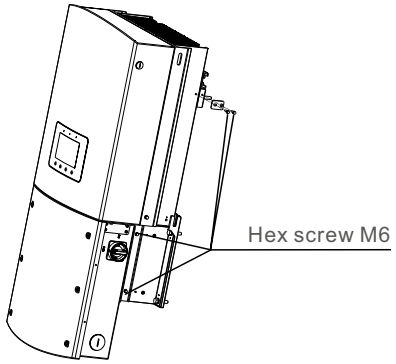

Figure 3.18

3. Installation

NOTE:

1) Before installation, it is necessary to ensure the switches on both sides of the wire box are turned 'OFF'. The switch knob should point to the 'OFF'.
2) There are two ways to install the inverter.
A) Hoisting (recommended):There are 2 hoisting holes on both sides of the inverter.
B) Lifting:There is one M10 holes on each side of the inverter,and install the M10 handle(Included in accessory kit).
3) If using the lifting method, align the power train and the wire box exactly to avoid damage to the inverter.
4) If the installation position is relatively high, a lift or scaffolding may be necessary to install the inverter.

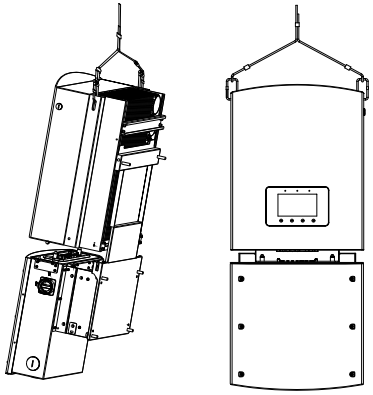

A

Figure 3.19

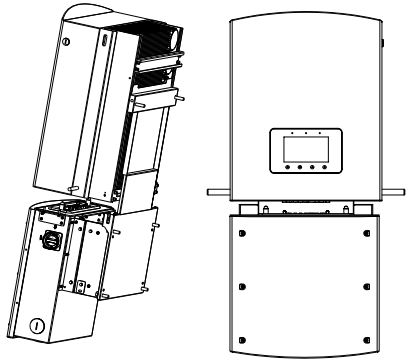

B

Figure 3.20

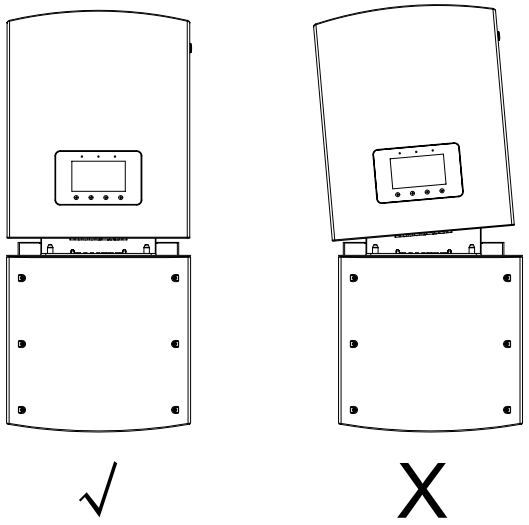

Figure 3.21

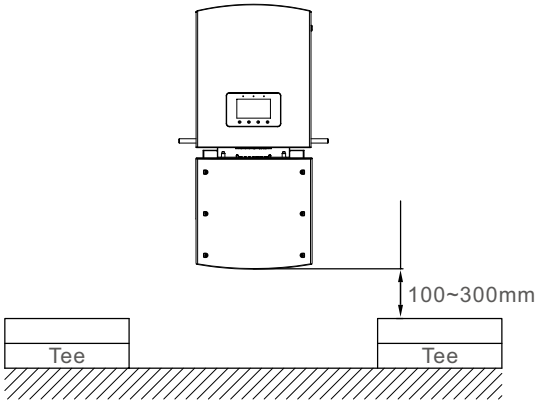

Figure 3.22

3. Installation

3.8 External ground connection point

An OPTIONAL external ground connection (PE) is provided on the right side of the inverter. To use the OPTIONAL external ground connection (see Figure 3.23):

1). Prepare the grounding conductor. Crimp a ring or fork (M4 size) terminal onto the grounding conductor.

2). Connect the grounding conductor (with crimped terminal) to the external ground connection point on the right side of the inverter. Use a maximum torque of 1.5 ft-lbs.

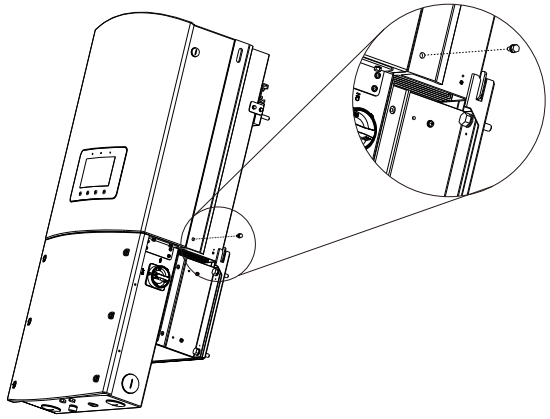

Figure 3.23 Connect the external grounding conductor

3.9 Module Level Rapid Shutdown (Optional)

For systems that are required to meet NEC 2017 NEC 690.12, Canadian Solar has an optional Module Level Rapid Shutdown. This product provides a panel level shutdown feature that brings the panel voltage to a safe level in case of a disaster situation.

This function is vital for the safety of firefighters and relevant personnel.

NOTE:

The Canadian Solar Transmitter inside the inverter is compatible with any module level rapid shutdown devices that comply with the Sunspec requirements.

The detailed installation please refer to the user manual of module level rapid shutdown devices.

If Tigo transmitter is installed inside the inverter wiring box, customer must install corresponding Tigo module level rapid shutdown devices. Please consult Tigo for detailed instructions.

Overview

There are three (3) sets of terminals used for RS485 communication.
Terminal 4 (Figure 3.8) has screw terminals for a multiple inverter communication solution using a standard MODBUS cable such as Belden stranded cable.
Terminal 5 is a standard RJ45 terminal and is used for creating a daisy chain connection between inverters as well as the wired data monitoring.
Terminal 6 is a 4-pin connector which is matched with Canadian Solar communication cables.

Monitoring system for multiple inverters

Multiples of inverters can be monitored in series using RS485 (as shown in Figure 4.1).
All 3 connectors support this type of inverter connection.

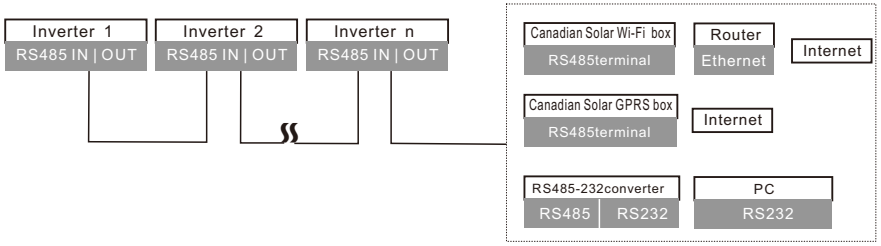

Figure 4.1 Multi-inverter monitoring system

4. Comm. & Monitoring

RS485 communication connection of RJ45 network port

When using terminal 5 (RJ45 connector) to connect, use the following wiring sequence.
Connect the Ethernet cable according to the TIA/EIA 568B standard. Insert the wire into the RJ45 plug and then use a standard network cable crimping tool to crimp connector to the cable.

4.1 RS485

4.1.1 Wiring a single inverter and daisy chain inverters

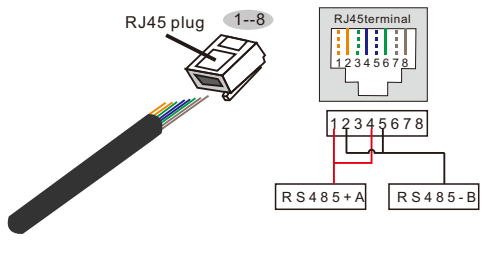

Correspondence between the cables and the stitches of plug

Pin 1: white and orange ; Pin 2: orange
Pin 3: white and green ; Pin 4: blue
Pin 5: white and blue ; Pin 6: green
Pin 7: white and brown ; Pin 8: brown

Pin 1 with 4 and 2 with 5 are used for communication connection

Pin 1 and 4 are connected with RS485+A
Pin 2 and 5 are connected with RS485 - B

Figure 4.2 Strip the insulation layer and connect to RJ45 plug

4.1.2 Maximum allowable inverters using RS485

The maximum allowable inverters per RS 485 daisy chain is 32 pcs. Please contact monitoring supplier for details.

4.1.3 120-ohm (Ω) resistor placement

120Ω resistor placement for end of line communication
Please contact monitor supplier for details.

5.1 Preliminary checks

WARNING
High Voltage.
AC and DC measurements should be made only by certified electricians.

5.1.1 DC Connections

Verify DC connections.

1. Lightly tug on each DC cable to ensure it is fully captured in the terminal.
2. Visually check for any wire strands that may not be inserted in the terminal.
3. Check to ensure the terminal screws are the correct torque.

5.1.2 AC Connections

Verify AC connections.

1. Lightly tug on each AC cable to ensure it is fully captured in the terminal.
2. Visually check for any wire strands that may not be inserted in the terminal.
3. Check to ensure the terminal screws are the correct torque.

5.1.3 DC configuration

Verify DC configuration.

5.1.3.1 VOC and Polarity

Measure VOC, and check string polarity.

5.1.3.1.1 Check string voltage

To measure the open circuit voltage (VOC) and polarity of the individual strings, perform the following steps:

WARNING
When the fuse holders are closed, parallel strings on the same MPPT are connected together. If there is a voltage difference between the parallel strings such as different string lengths, current will flow between the parallel strings. Opening and closing the fuse holder in this instance is the same as opening and closing under load. Damage to equipment and /or injury to personnel may occur.

1. Ensure that all fuse holders are open. If the system is equipped with module level shutdown functionality, apply power to the MLRS transmitter. For Canadian Solar inverters equipped with an integrated transmitter, apply AC power to the inverter by turning the AC switch ON. Refer to MLRSD manufacturer documentation to ensure proper operation of MLRS function.

2. Close the fuse holder for the string under test only. Connect the positive lead of the meter to the positive string cable of the string under test. Connect the negative lead of the meter to the negative string cable of the string under test.
3. Measure the voltage present between the positive and negative pole of each string. If the open circuit voltage of the string is near the maximum value accepted by the inverter, verify the string length. Low ambient temperatures cause an increase in the string voltage causing damage to the inverter.
4. Check the polarity of the string. All digital meters have a negative ("-") indicator that indicates when a voltage is negative; in this case a string connected in reverse polarity.
5. Open fuse holder for the tested string. Repeat steps 2 through 4 for each string.

WARNING
Input voltages higher than the maximum value accepted by the inverter (see "Specifications" in Section 9) may damage the inverter.
Although Canadian Solar inverters feature reverse polarity protection, prolonged connection in reverse polarity may damage these protection circuits and/or the inverter.

5.1.3.2 Leakage to ground

Measure leakage to ground.

5.1.3.2.1 Detection of leakage to ground

Canadian Solar inverters are transformer less and do not have an array connection to ground. Any measurement of a fixed voltage between ground and either the positive or negative string voltage indicates a leakage (ground fault) to ground and must be corrected prior to energizing the inverter or damage to the inverter may result.

To measure leakage to ground, perform the following steps:

1. Ensure that all fuse holders are open.
2. Ensure that neither negative nor positive DC conductors are connected to the ground strip.
3. Measure each string positive connection to ground.
4. Measure each string negative connection to ground.
5. Verify the voltage is "floating", not a consistent voltage to ground. Make sure you notice the units of the measurement. mV is not the same as V.
6. Do not close the fuse holder and connect the strings if a leakage to ground has been detected. Improper operation and damage to the inverter may result.

5.1.4 AC configuration

Verify AC configuration.

5.1.4.1 Measure VAC and frequency

Measure VAC and verify voltage is within local grid standards.

1. Measure each phase to ground (L-G).
2. Measure phases to the other phases in pairs (L-L). PH A to PH B, PH B to PH C and PH C to PH A.
3. If the meter is equipped, measure the frequency of each phase to phase.
4. Ensure each measurement is within local grid standards and the inverter specifications as noted in Section 9 “Specifications”.

5.1.4.2 Phase rotation test

A phase rotation test is recommended to ensure the phases have been connected in the appropriate order. Canadian Solar inverters do not rely on specific phase rotation connections. However, the local utility may require a specific phase rotation or a record of the phase configuration of the installation.

5.1.5 AC Secure inverter wiring box

Close the Canadian Solar inverter wiring box inverter.

Place the cover on the inverter wiring box. Apply pressure to the cover while inserting the screws.

Tighten the screws in a cross pattern to the appropriate torque setting. See Figure 9.1.

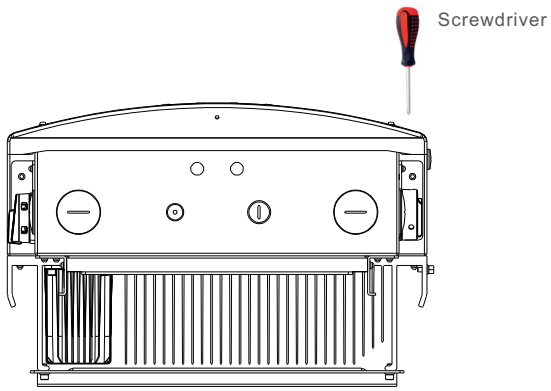

Figure 5.1 Bottom side of inverter

5. Commissioning

5.2 Selecting the appropriate grid standard

5.2.1 Verifying grid standard for country of installation

Canadian Solar inverters are used worldwide and feature preset standards for operating on any grid. Although the grid standard is set at the factory, it is essential the grid standard be verified for the country of installation before commissioning.

The menu for changing the grid standard or for creating a custom standard is accessible as described in Section 6.7 and below.

WARNING

Failure to set the correct grid standard could result in improper operation of the inverter, inverter damage or the inverter to not operate at all.

5.3 Changing the grid standard

5.3.1 Procedure to set the grid standard

NOTE

This operation is for service technicians only. The inverter is customized according to the local standard before shipping. There should be no requirement to set the standard.

NOTE

The “User-Def” function can only be used by the service engineer and changing the protection level must be allowed by the local utlilty.

1. From the main screen on the display, select ENTER. There are 4 submenu options, use the UP/DOWN arrows to highlight ADVANCED SETTINGS. Press enter to select.

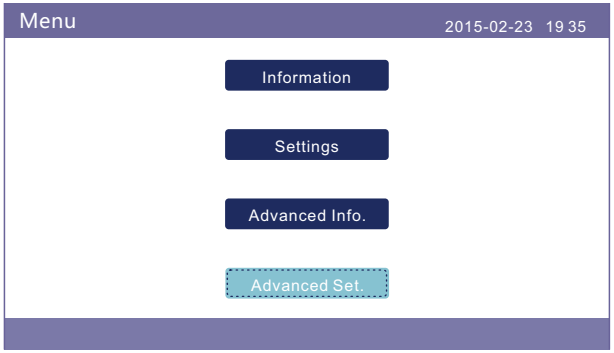

Figure 5.2

2. The LCD screen will show that a password is required. The default password is "0010", press the DOWN key to move cursor, press the UP key to change the highlig hted digit.

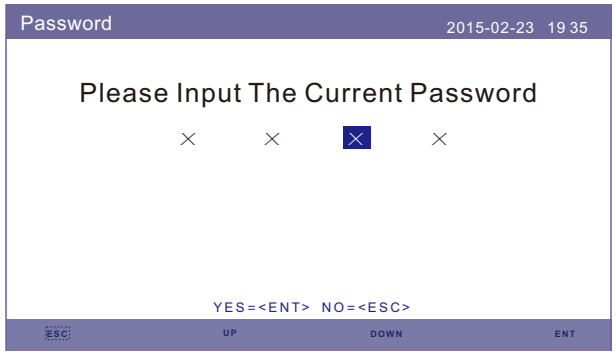

Figure 5.3

3. Use the UP/DOWN keys to highlight the SELECT STANDARD option. Press enter to select.

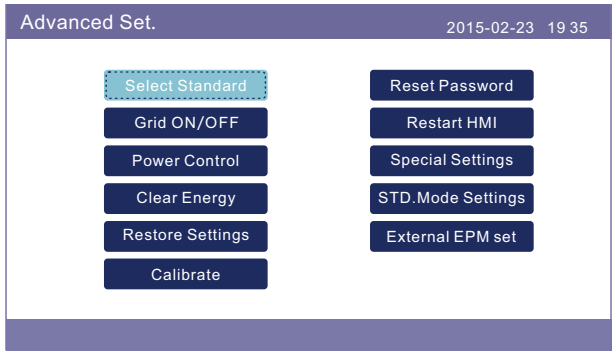

Figure 5.4

5. Commissioning

4. Select the grid standard for the country of installation (see Figure 5.5).

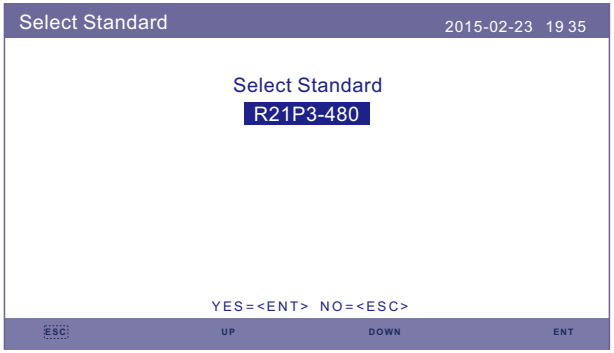

Figure 5.5

Press the UP or DOWN key to select the standard (AS4777, VDE4105, R21P3-480, G59/3, CQC, User-Def function, etc.). Press the ENTER key to confirm the setting. Press the ESC key to cancel changes and return to the previous menu.

UL-480V is default setting for the U.S. markets.
UL-480V-A is the standard for inverters with AFCI function.
R21P3-480 is default setting for the U.S. markets.
R21P3-48A is the standard for inverters with AFCI function.
ISONE480A is available for New England region.

5. Once the grid standard has been selected, select SAVE AND SEND on the following screen to save the new grid setting.

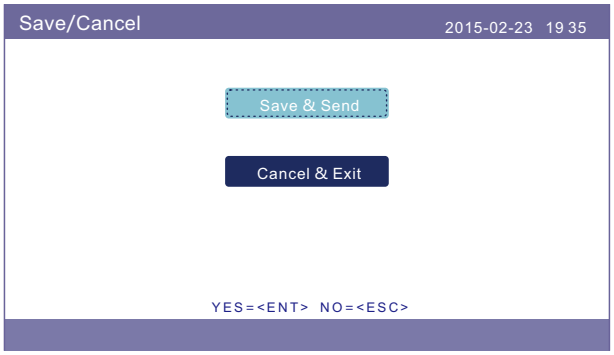

Figure 5.6

5.4 Setting a custom grid standard

WARNING

- Failure to set the correct grid standard could result in improper operation of the inverter, inverter damage or the inverter to not operate at all.
- Only certified personnel should set the grid standard.
- Only set the grid configuration that is approved by your location and national grid standards.

1. Please refer to section 6.7 “Advanced Settings” for procedures to create a custom grid configuration for User-Def menu option.

6.1 Start-up procedure

To start-up the inverter, it is mandatory that the steps below are followed in the exact order outlined.

1. Ensure the commissioning checks in Section 5 have been performed.
2. Switch the AC switch ON.
3. Switch the DC switch ON. If the PV array (DC) voltage is higher than the inverter's start-up voltage, the inverter will turn on. The red DC POWER LED and LCD will be continuously lit.
4. Canadian Solar inverters are powered from the DC side. When the inverter detects DC power that is within start-up and operating ranges, the inverter will turn on. After turn-on, the inverter will check internal parameters, sense and monitor AC voltage, hertz rate and the stability of the supply grid. During this period, the green OPERATION LED will flash and the LCD screen will show INITIALIZING. This tells the operator that the inverter is preparing to generate AC power.
5. After the locally mandated delay (300 seconds for IEEE-1547 compliant inverters), the inverter will start generating AC power. The green OPERATION LED will light continuously and the LCD screen will show GENERATING.

CAUTION

The inverter's surface temperature can reach up to 75℃ (167^{0} F). To avoid risk of burns, do not touch the surface when the inverter is in the operational mode. Additionally, the inverter must be installed out of the reach of children.

6.2 Shutdown procedure

To stop the inverter, it is mandatory that the steps below are followed in the exact order outlined.

1. Switch AC switch OFF.
2. Wait approximately 30 seconds (during this time, the AC side capacitors are dissipating energy). If the inverter has DC voltage above the start-up threshold, the red POWER LED will be lit. Switch the DC switch OFF.
3. Confirm all LED's switch OFF (~one (1) minute).

CAUTION

Although the inverter DC disconnect switch is in the OFF position and all the LED's are OFF, operators must wait five (5) minutes after the DC power source has been disconnected before opening the inverter cabinet. DC side capacitors can take up to five (5) minutes to dissipate all stored energy.

During normal operation, the LCD shows the inverter's current status. The screen will display current power generation, total generation, a bar chart showing AC power generation over time, etc. Press the button labeled ESC to switch from the “home dashboard” (i.e., the initial interface for owners and operators) to other screens showing details of daily and monthly generation. Press the ENTER button to switch to the Main Menu. Pressing the ESC button will always return to the previous screen. See Figure 6.1 for an operational flow overview.

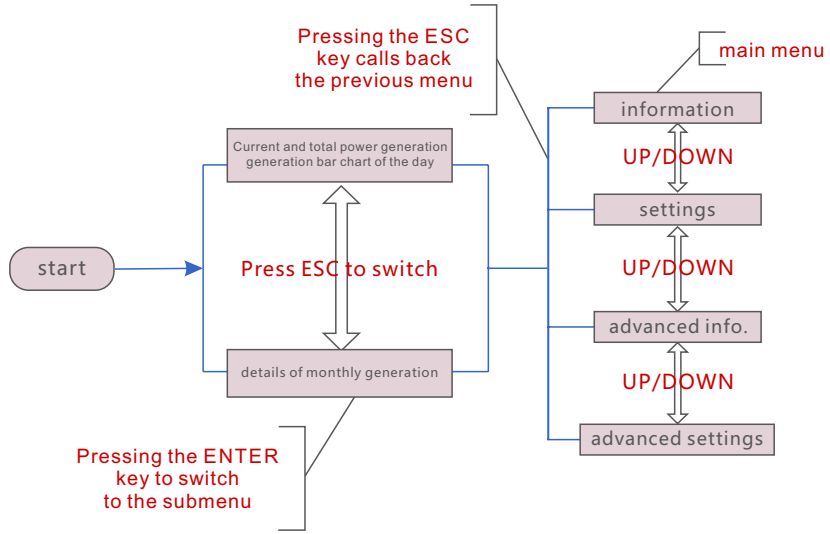

Figure 6.1 Operational flow overview

6.3 7” LCD front panel display interface

The initial interface of the inverter (see Figure 6.2) shows the current operational status, current power, the day/month/year power generation, and total generation. Looking at the bar chart, owners and operators can view AC generation information over time.

6. Normal operation

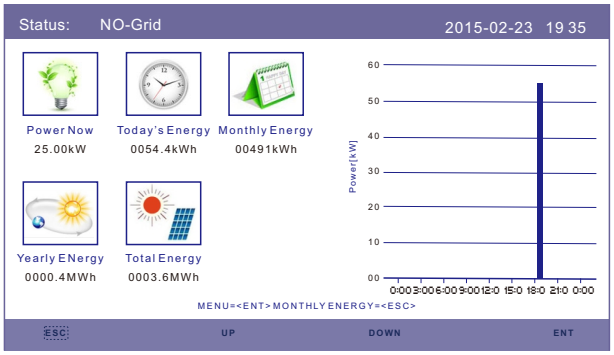

Figure 6.2 Initial interface details

Press the UP or DOWN key to display the inverter yearly/monthly energy detail screen (see Figure 6.3). In the current interface, press the ENTER key to move the cursor, press the UP or DOWN key to view yearly/monthly energy detail.

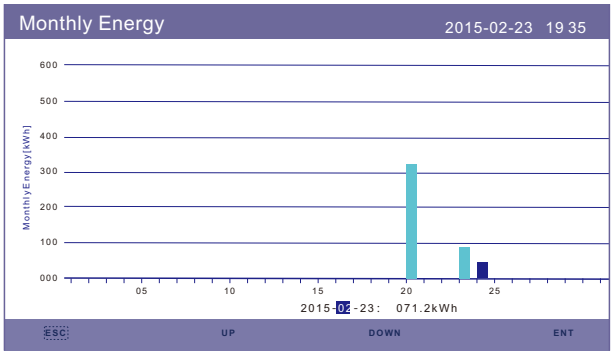

Figure 6.3 Monthly energy detail

6. Normal operation

6.3.1 Main menu

There are four sub-menus in the main menu as shown in Figure 6.4. Press ESC from the home screen to access this menu.

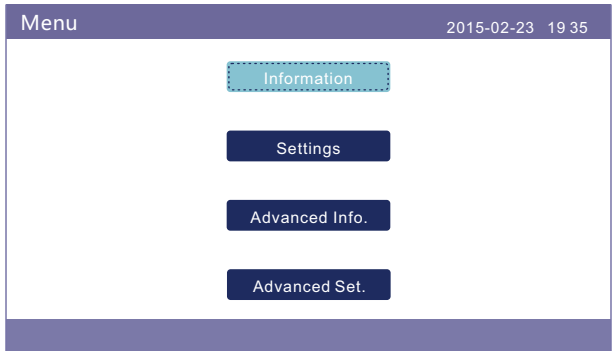

Figure 6.4 Four sub-menus

6.4 Sub-menu “Information”

The inverter LCD provides access to operational data and information (see Figures 6.5 and 6.6). Select the "Information" sub-menu. Move to the next page by scrolling UP or DOWN.

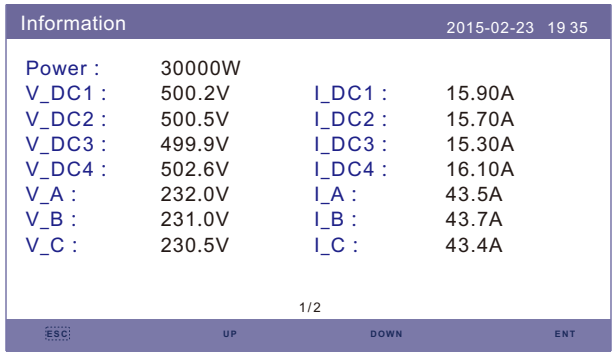

Figure 6.5 Information (screen 1)

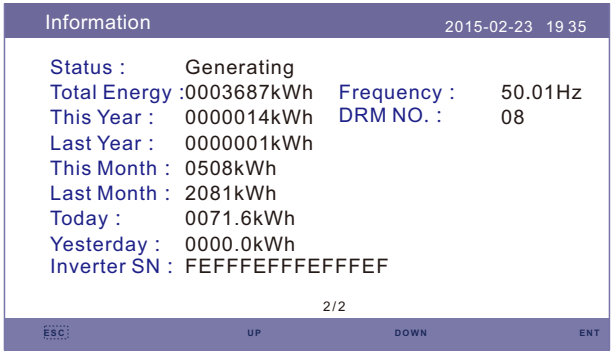

Figure 6.6 Information (screen 2)

6.5 Sub-Menu “Settings”

Figure 6.7 shows the interface as it is displayed when the Settings menu is selected. Press the UP or DOWN key to select different options, and press the ENTER key to enter the submenu.

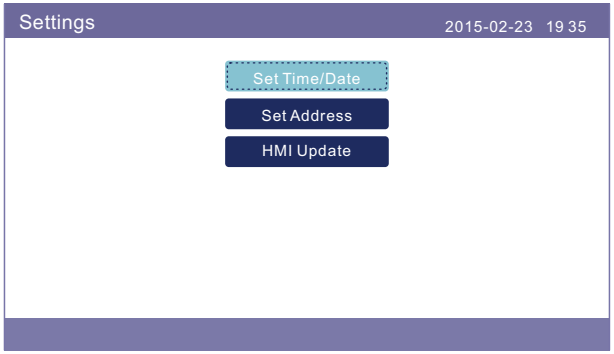

Figure 6.7 Settings menu

6. Normal operation

6.5.1 Setting time

This function allows time and date setting. The time is displayed as a 24-hour clock. When this function is selected, the LCD will display as shown in Figure 6.8. Press the UP or DOWN key to set time and date. Press the ENTER key to move from one option to the next (from left to right). Press the ESC key to save the settings and return to the previous menu.

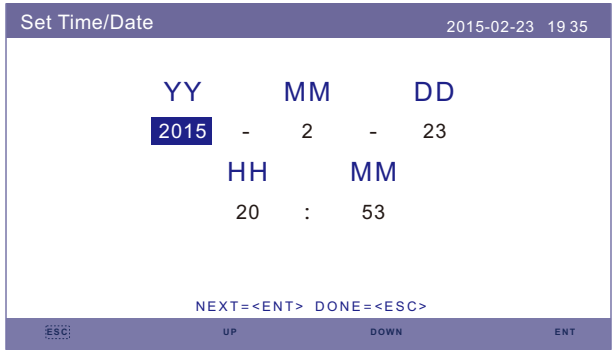

Figure 6.8 Setting date and time

6.5.2 Setting inverter address for communications

This function is used to set the address of an inverter for communication purposes. The address can be assigned from “01” to “99” (see Figure 6.9). The default address of the inverter is “01”. Press the UP or DOWN key to set the address. Press the ENTER key to save the settings. Press the ESC key to cancel the change and return to the previous menu.

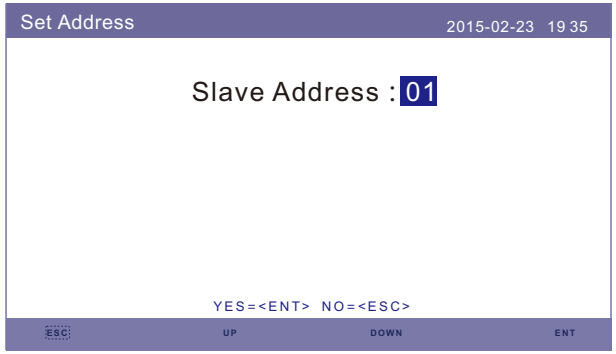

Figure 6.9 Address setting

6.5.3 Current system version

This function is used to view the current system version. See Figure 6.10.

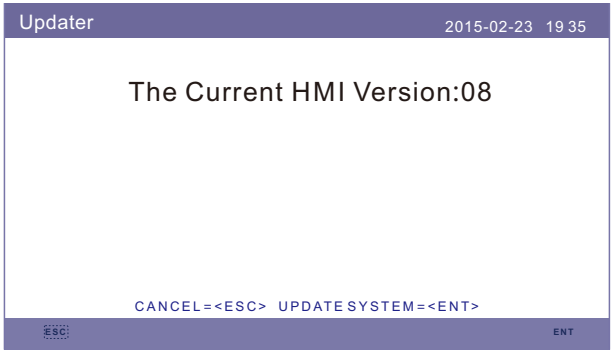

Figure 6.10 System version

6.6 Sub-menu “Advanced Info” – Technicians only

NOTE

Password required – restricted access – authorized technicians only.
Unauthorized access will void the warranty

Select Advanced Info from the main menu. The LCD screen will show that a password is required, as shown in Figure 6.11. The default password is "0010", press the DOWN key to move cursor, press the UP key to change the digit. Press ENTER to accept the password.

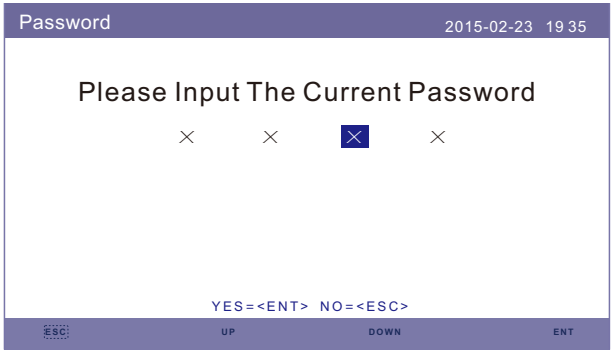

Figure 6.11 Enter a password

After entering the correct password, the LCD will show the menu shown in Figure 6.12.

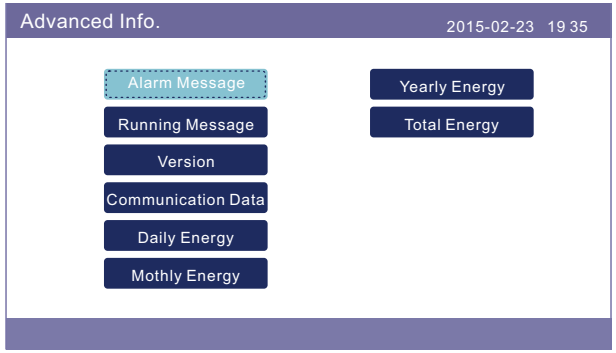

Figure 6.12 Advanced information

The screen can be scrolled manually by pressing the UP or DOWN key. Pressing the ENTER key gives access to a submenu.

6.6.1 Alarm Message

The display shows the last ten (10) or less alarm messages (see Figure 6.13). Screens can be scrolled manually by pressing the UP or DOWN key.

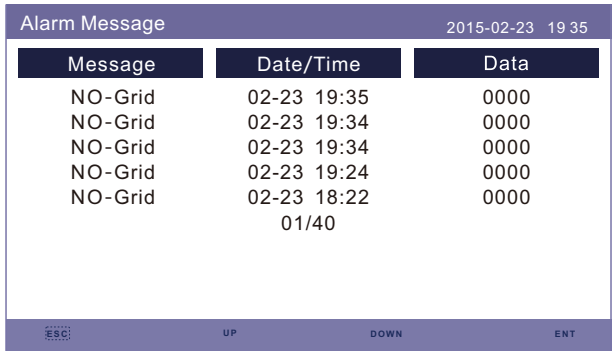

Figure 6.13 Alarm messages

6. Normal operation

6.6.2 Running Message

The screen shows the inverter's internal operational parameters (see Figure 6.14).

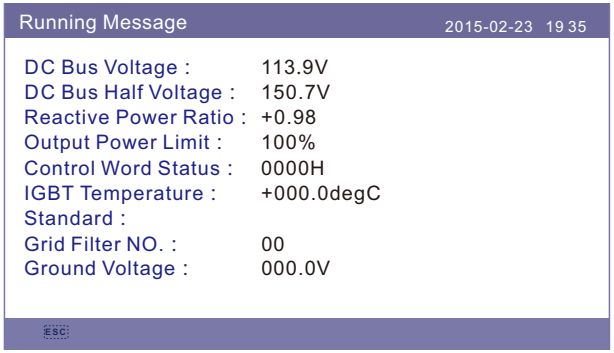

Figure 6.14 Operational information

6.6.3 Version

The screen shows the inverter's current hardware and software versions (see Figure 6.15).

Figure 6.15 Current hardware and software versions

6.6.4 Communication Data

The screen shows the inverter's internal communication data (see Figure 6.16), which is for service technicians only.

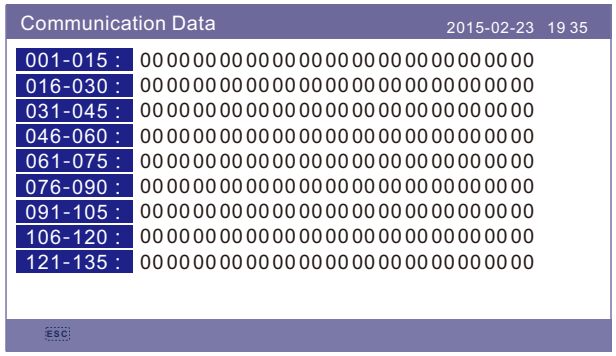

Figure 6.16 Communication data

6.6.5 Daily Energy

The screen shows the inverter's daily energy detail (see Figure 6.17). Press the ENTER key to move cursor or press the UP or DOWN key to select energy data for a different date.

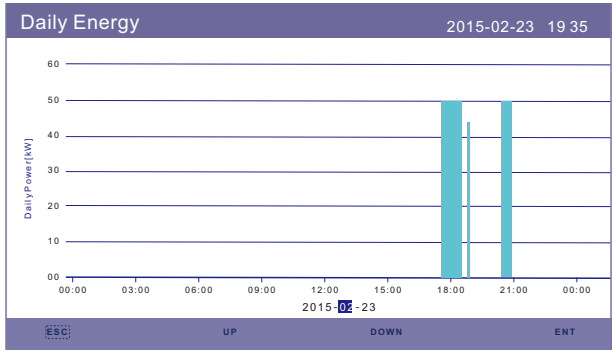

Figure 6.17 Daily power generation capacity

6. Normal operation

6.6.6 Monthly Energy

The screen shows the inverter's daily energy detail for the month (see Figure 6.18). Press the ENTER key to move cursor, and press the UP or DOWN key to select energy details for a different month.

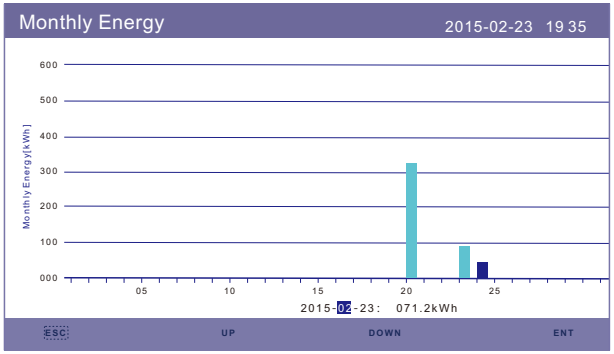

Figure 6.18 Monthly power generation details

6.6.7 Yearly Energy

The screen shows the inverter's monthly energy detail for the year (see Figure 6.19). Press the UP or DOWN key to switch to view monthly energy of a different year.

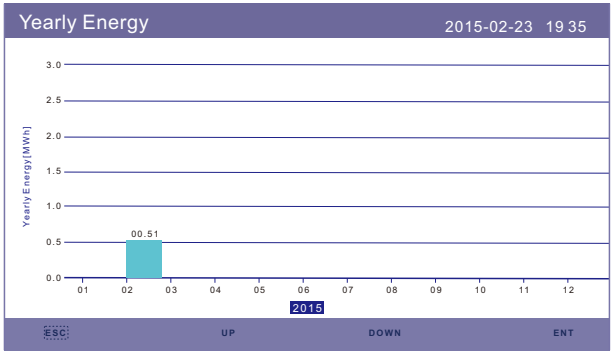

Figure 6.19 Annual generating capacity details

6.6.8 Total Energy

The screen shows the inverter total energy (lifetime) detail (see Figure 6.20).

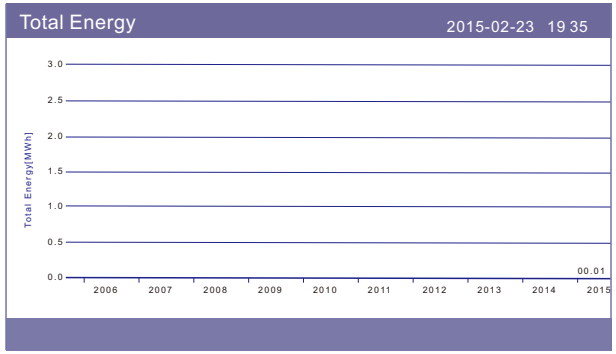

Figure 6.20 Total generating capacity details

6.7 Sub-menu “Advanced Settings” – Technicians only

NOTE

This function is for authorized technicians only. Improper access and operation may result in abnormal results and damage to the inverter. Password required – restricted access – authorized technicians only. Unauthorized access will void the warranty.

Select Advanced Settings from the main menu (see Figure 6.21) to access the following options. Enter password as described in Section 6.6.

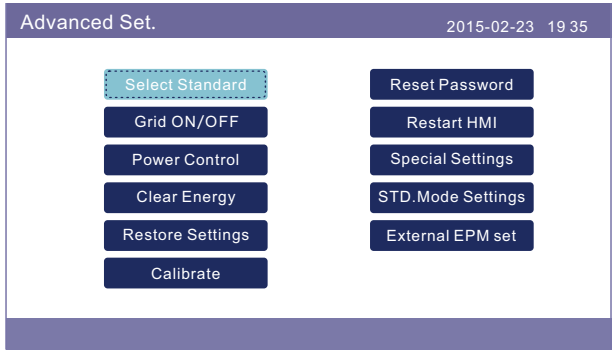

Figure 6.21 Advanced settings

6. Normal operation

6.7.1 Select Standard

NOTE

This is for service technicians only. The inverter is customized according to the local standard before shipping. There should be no requirement to set the standard.

The "User-Def" function can be only used by the service engineer, and changing the protection level must be approved by the local grid company.

Select grid standard (see Figure 6.22).

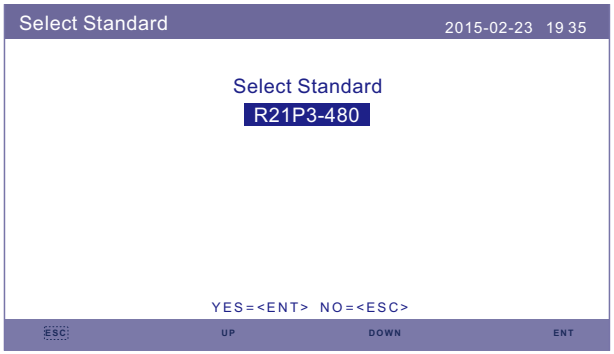

Figure 6.22 Select grid standard

Press the UP or DOWN key to select the standard (AS4777, VDE4105, R21P3-480, G59/3, CQC, User-Def function, etc.). Press the ENTER key to confirm the setting. Press the ESC key to cancel changes and return to the previous menu.

Rule 21 uses the standard R21P3-480 for applications not requiring arc fault and R21P3-48A for applications requiring arc fault protection.

Standard UL-480V/UL-480V-A/ISONE480A are used where Rule 21 is not required.

Selecting the User-Def sub menu will access to the following sub menu (see Figure 6.23).

The User-Def screen shows the parameters that can be adjusted for local grid conditions (see Figure 6.23). This section is for service technicians only.

6. Normal operation

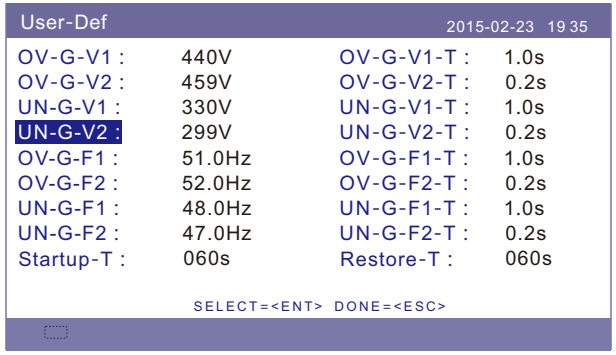

Figure 6.23 User-Def selections

Below is the range for each setting for use in the User-Def function. You may change the limit manually thus creating a custom grid profile by using this function.

OV-G-V1: 236---335V	OV-G-F1: 60.2-63Hz
OV-G-V1-T: 0.1---9S	OV-G-F1-T: 0.1---9S
OV-G-V2: 248---341V	OV-G-F2: 61-63Hz
OV-G-V2-T: 0.1---1S	OV-G-F2-T: 0.1---9S
UN-G-V1: 173---236V	UN-G-F1: 57-59.5Hz
UN-G-V1-T: 0.1---9S	UN-G-F1-T: 0.1---9S
UN-G-V2: 132---219V	UN-G-F2: 57-59Hz
UN-G-V2-T: 0.1---1S	UN-G-F2-T: 0.1---9S

Table 6.1 Setting ranges for User-Def

Setting value	480V Rated (L-L)	480V Rated (L-N)
Vup-Limit1	528<V<576	305<V<333
Time1	1S	1S
Vup-Limit2	V≥576	V≥333
Time2	0.16S	0.16S
Vdw-Limit1	288≤V<422	166≤V<244
Time1	2S	2S
Vdw-Limit2	V<288	V<166
Time2	0.16S	0.16S
Fup-Limit1	60.5Hz < F < 62Hz	60.5Hz < F < 62Hz
Time1	2S	2S
Fup-Limit2	F > 62Hz	F > 62Hz
Time2	0.16S	0.16S
Fdw-Limit1	57Hz < F < 59.5Hz	57Hz < F < 59.5Hz
Time1	2S	2S
Fdw-Limit2	57Hz < F	57Hz < F
Time2	0.16S	0.16S

Table 6.2 Baseline Inverter Settings

NOTE

The initial value of the User-Def standard is for reference only. It does not represent a correct value suitable for use.

Press the UP or DOWN key to scroll through items. Press the ENTER key to edit the highlighted item. Press the UP or DOWN key again to change the setting. Press the ENTER key to save the setting (see Figure 6.27). Press the ESC key to cancel the change and return to the previous menu.

When changes are complete, select ENTER. The following screen appears. Select “SAVE & SEND” to write the custom grid settings to memory and begin using them.

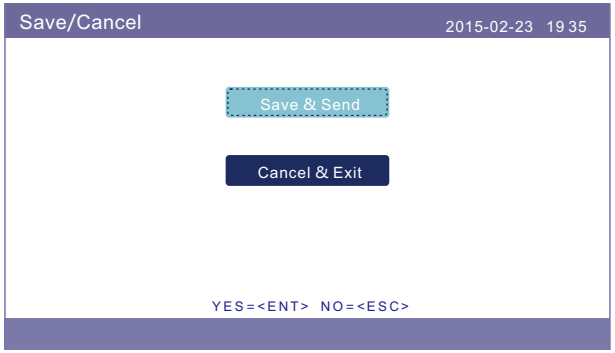

Figure 6.24 Save and set screen at conclusion of setting grid standard

6.7.2 Grid ON/OFF

This function is used to start or stop the inverter from generating power (see Figure 6.25).
This function may be used to manually disable an inverter during maintenance without turning off the AC switch.
Press the UP or DOWN key to move the cursor. Press the ENTER key to execute the setting.
Press the ESC key to return to the previous menu.

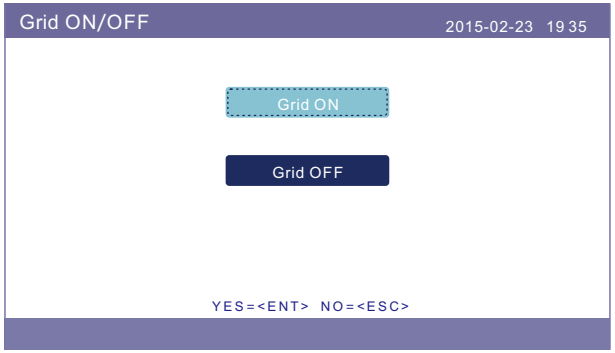

Figure 6.25 Set grid ON/OFF

6. Normal operation

6.7.3 Power Control

Active and reactive power can be set through the Power Control option (see Figure 6.26).

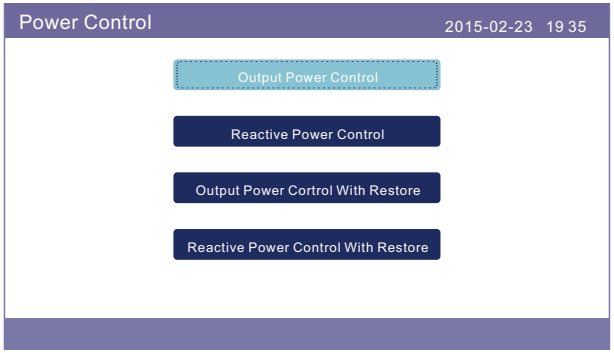

Figure 6.26 Power setting

NOTE
This function should be accessed by qualified maintenance personnel only. The inverter operating in the wrong power setting will prevent the inverter from reaching maximum power.

6.7.4 Clear Energy and Restore Settings

Clear Energy will reset the inverter's yield.
Restore Settings will reset all the settings to factory default.

NOTE
These two functions should be accessed by qualified maintenance personnel only. Operating the inverter with the wrong settings will prevent the inverter from working properly.

6.7.5 Calibrate

Warranty or maintenance may result in resetting total generating data. This function allows maintenance personnel to amend the total generating data of the replacement inverter to the original one (see Figure 6.27).
By using our data monitoring hardware, the data on the monitoring website can automatically synchronize with the preset total generating power of the inverter.

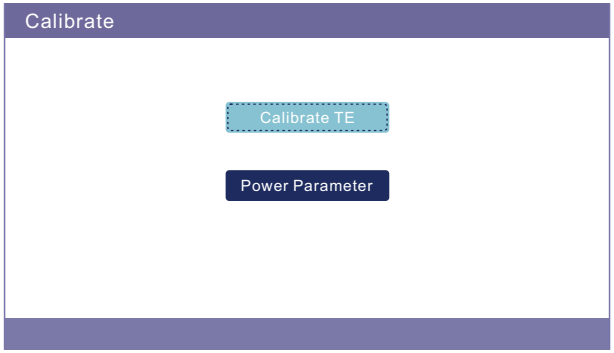

Figure 6.27 Save and set screen at conclusion of setting grid standard

Press the DOWN key to move the cursor. Press the UP key to revise the value. Press the ENTER key to execute the setting. Press the ESC key to return to the previous menu.

6.7.6 Reset Password

First enter the current password (see Figure 6.28), by pressing the DOWN key to move the cursor, and press the UP key to revise the digit.

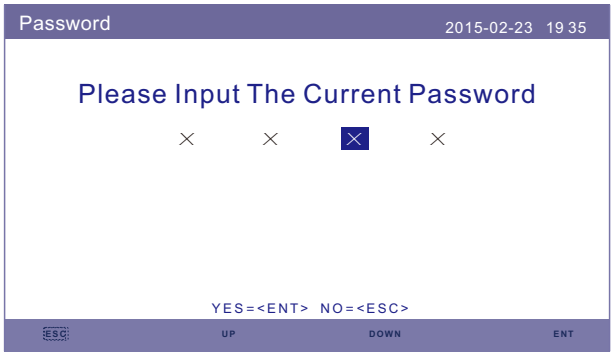

Figure 6.28 Password setting

After entering the current password, you can create a new password. Upon confirming the new password, press the ENTER key to execute the new setting (see Figure 6.29).

Figure 6.29 Set new password

6.7.7 Restart HMI

The function reboots the HMI and LCD display.

6.7.8 Special Settings

This section is applicable to maintenance personnel only.

There are 4 items in special settings submenu.

1. Special_1 Set 2. LVRT Control 3. IgZero Set 4.VgCompensation

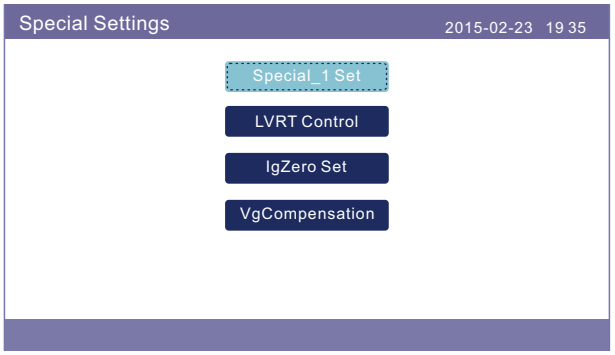

Figure 6.30 Special settings

6. Normal operation

6.7.8.1 Special_1 Set

There are 10 items in special_1 Set submenu.

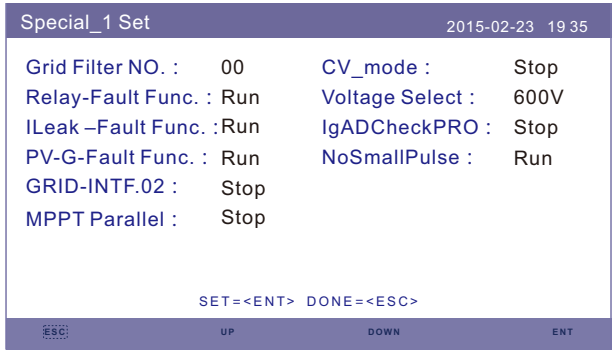

Figure 6.31 Special_1 set

6.7.8.1.1 Grid Filter No.

Press the ENTER to show the submenu of Grid Filter Set.
Press the UP/DOWN key to select the value.
Press the ENTER key to save the setting and return to the previous menu.

This function is applicable by maintenance personnel only, wrong operation will prevent the inverter from reaching maximum power.

6.7.8.1.2 Relay-Fault Func

This function is applicable by maintenance personnel only, wrong operation will prevent the inverter from reaching maximum power.

6.7.8.1.3 ILeak-Fault Func

This function is applicable by maintenance personnel only, wrong operation will prevent the inverter from reaching maximum power.

6.7.8.1.4 PV-G-Fault Func

This function is applicable by maintenance personnel only, wrong operation will prevent the inverter from reaching maximum power.

6.7.8.1.5 GRID-INTF.02

This function is applicable by maintenance personnel only, wrong operation will prevent the inverter from reaching maximum power.

6.7.8.1.6 MPPT Parallel

This is used for parallel strings into different inverters MPPTs.
Press Enter and press up or down to change the settings.
Selecting RUN will enable parallel strings setup. All MPPT channels will operate in parallel.
Selecting STOP disables parallel string setup. All MPPT channels will operate independently.

This function is applicable by maintenance personnel only, wrong operation will prevent the inverter from reaching maximum power.

6.7.8.1.7 CV_mode

Selecting RUN will enable fixed input voltage. The inverter will not operate if the input voltage is lower than the set voltage.
Selecting STOP will disable this function.

This function is applicable by maintenance personnel only, wrong operation will prevent the inverter from reaching maximum power.

6.7.8.1.8 Voltage Select

Select the value of fixed input voltage. And the increment is 10V.

This function is applicable by maintenance personnel only, wrong operation will prevent the inverter from reaching maximum power.

6.7.8.1.9 IgADCheckPRO

This function is applicable by maintenance personnel only, wrong operation will prevent the inverter from reaching maximum power.

6.7.8.1.10 NoSmallPulse

This function is applicable by maintenance personnel only.

6.7.8.2 LVRT Control

There are 5 items in LVRT Control submenu.

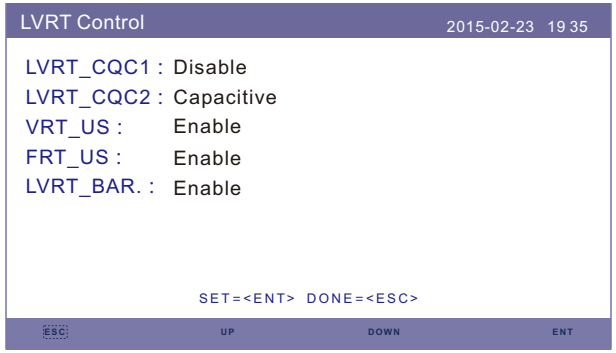

Figure 6.32 LVRT Control

Items 1, 2, and 5 are not used for the US, the function VRT_US (voltage ride through) and FRT_US (frequency ride through) operation are used for UL1741SA.
Selecting the setting to Enable will enable the inverter grid protection limits in accordance with UL1741SA requirements. Selecting Disable will reset the inverter to IEEE 1547 requirements.

6.7.8.3 IgZero Set

This function is used for DSP adjustment settings for current error correction, leakage current limitation, insulation resistance limitation, etc.
There are 6 items in IgZero Set submenu.

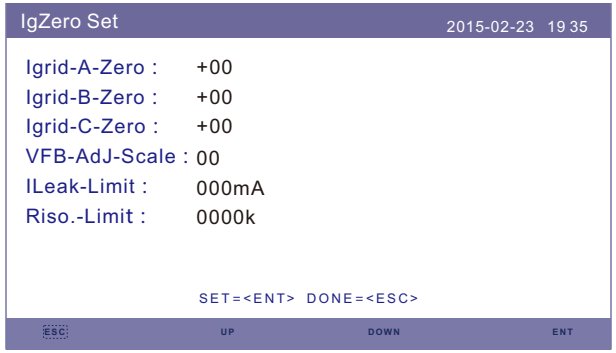

Figure 6.33 IgZero Set

6. Normal operation

6.7.8.4 VgCompensation

This function is used to calibrate inverter output voltage measurement error.
There are 3 items in VgCompensation submenu.

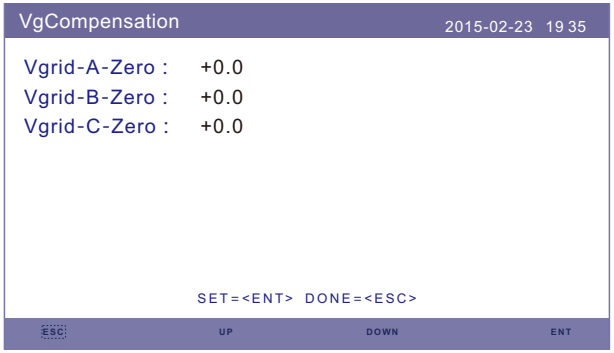

Figure 6.34 VgCompensation

6.7.9 STD. Mode Settings

There are 6 items in the STD. mode settings submenu.

1. Working Mode Set

2. Power Rate Limit

3. Freq Derate Set

4. 10mins Voltage Set

5. Voltage PCC Set

6. Initial Settings

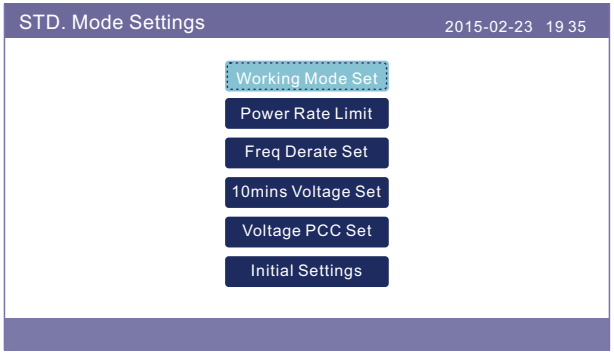

Figure 6.35 STD.Mode Settings

6.7.9.1 Working Mode Set

There are TWO situations with different grid standards selected.

6.7.9.1.1 With UL Standard selected

NOTE
The following modes are for "UL-480V", "UL-480V-A".

Canadian Solar US version inverters have Seven working modes:

1. Null
2. Volt-watt
3. Volt-Var
4. Fixed-PF
5. Reac-power
6. P-factor
7. VgWatt-UL

Based on UL1741SA, working mode 1,3,4,7 can be used by grid operator.

1.Null

Description: Inverter is not under any working mode.

2. Volt-Watt (Not Required)

Description: Inverter will change the active output power based on voltage change.

Note: This Setting is NOT required by UL1741SA Standards.

This function is for maintenance personnel only, wrong operation will prevent the inverter from reaching maximum power.

3. Volt-Var (Default)

Description: Inverter will change the reactive output power based on voltage change.

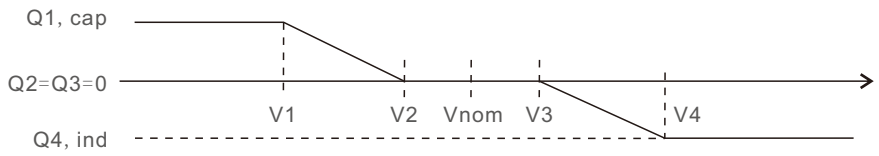

Figure 6.24 Volt-VAR curve for Q(V)

6. Normal operation

Default Settings for UL1741SA:

Q1: (0-60%) Default +30% Q4: (-60%-0%) Default -30%

Rated 480V Grid

V1:(221-279V) Default 242V V2: (221-279V) Default 273V

V3:(277-320V) Default 281V V4: (277-320V) Default 305V

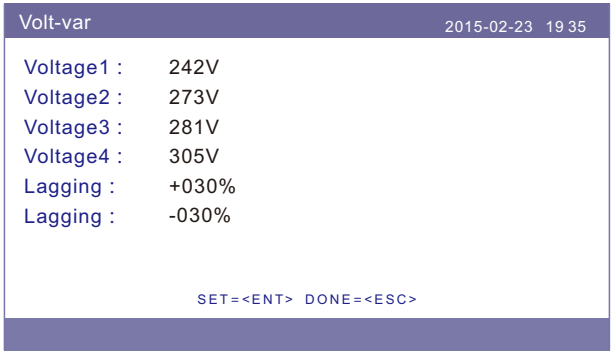

Figure 6.34 Volt-var

4.Fixed-PF

Description: Inverter will output power with fixed power factor.

Setting Range: -0.8 to +0.8

Default value is PF = 1

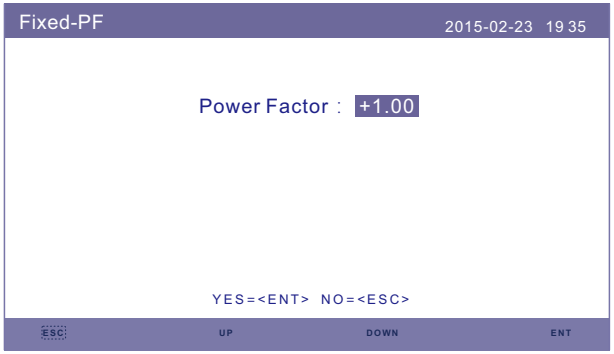

Figure 6.34 Fixed-PF

5. Reac-power (Not Required)

Description: Inverter will generate reactive power based on changing output power.

Note: This Setting is NOT required by UL1741SA Standards.

This function is for maintenance personnel only, wrong operation will prevent the inverter from reaching maximum power.

6. P-factor (Not Required)

Description: Inverter will change power factor based on changing output power.

Note: This Setting is NOT required by UL1741SA Standards.

This function is for maintenance personnel only, wrong operation will prevent the inverter from reaching maximum power.

7.VgWatt-UL

Description: Inverter will change the active output power based on voltage change.

Note: This is the Volt-Watt Setting for UL1741SA Standards.

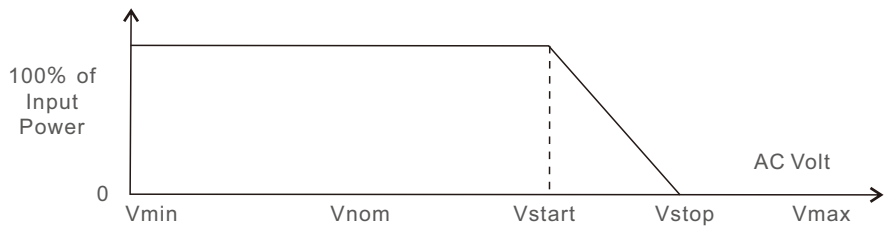

Figure 6.28 Volt-Watt characteristic

Default Settings for UL1741SA:

Rated 480V Grid

V1:less than V2

V2:less than Vstart

V3 (Vstart): (277-333V) Default305V

V4 (Vstop): (305-360V) Default 333V

P1:100% P2:100% P3: 100% P4:0%

6. Normal operation

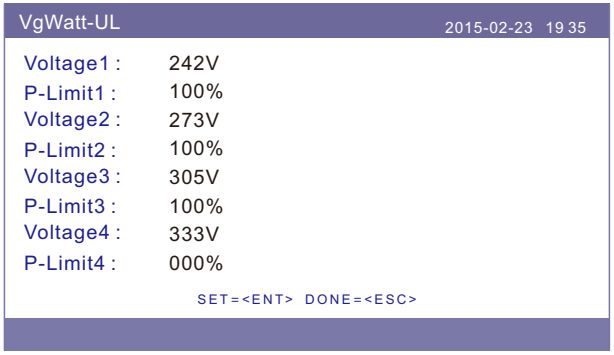

Figure 6.34 VgWatt-UL

6.7.9.1.2 With Rule21 Standard selected

NOTE
The following modes are for "R21P3-480", "R21P3-48A".

Canadian Solar US version inverters have Ten working modes:

1. Null
2. Volt-watt
3. Volt-Var
4. Fixed-PF
5. Reac-power
6. P-factor
7. VgWatt-UL

Based on Rule21, working mode 1,2,3,4 can be used by grid operator.

NOTE
The other three working mode"P1-V-Watt","P1-V-Var" and "P1-V-P&V-Q" are NOT applicable for settings.

1.Null (Mode Reset)

Description: Inverter is not under any working mode.

2. Volt-Watt

Description: Inverter will change the active output power based on voltage change.

Note: This is the Volt-Watt Setting for Rule21 Standards.

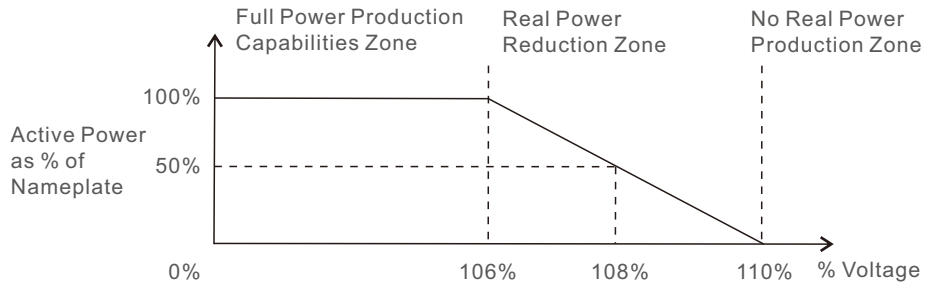

Figure 6.30 Volt-Watt characteristic

Default Settings for Rule21 Standards:

Rated 480V Grid

V1:less than Vstart

V2 (Vstart): (221-304V) Default 293V

V3 (Vstop): (277-332V) Default 304V

V4: larger than Vstop

P1:100% P2:100% P3: 0% P4:0%

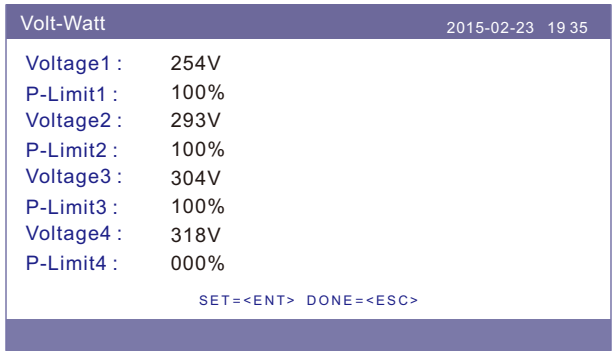

Figure 6.34 Volt-Watt

6. Normal operation

3. Volt-Var

Description: Inverter will change the reactive output power based on voltage change.

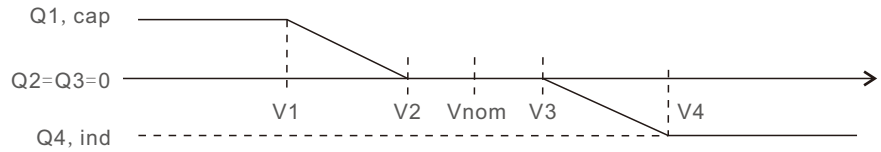

Figure 6.31 Volt-VAR curve for Q(V)

Default Settings for Rule21 Standard:

Q1: (0-60%) Default +30% Q4: (-60%-0%) Default -30%

Rated 480V Grid

V1:(221-277V) Default 254V V2: (221-304V) Default 268V

V3:(277-332V) Default 286V V4: (277-332V) Default 296V

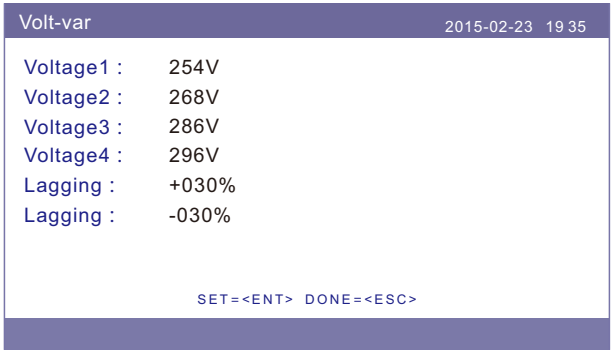

Figure 6.34 Volt-var

4.Fixed-PF

Description: Inverter will output power with fixed power factor.

Setting Range: -0.8 to +0.8

Default value is PF = 1

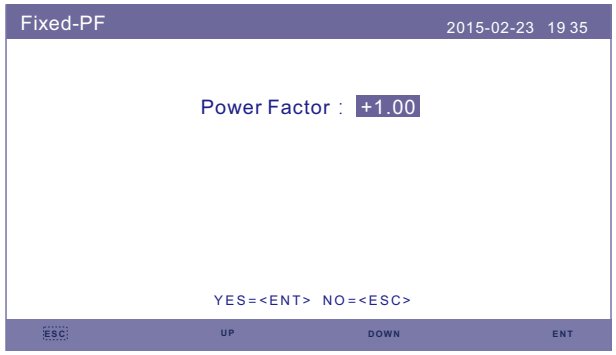

Figure 6.34 Fixed-PF

5. Reac-power (Not Required)

Description: Inverter will generate reactive power based on changing output power.

Note: This Setting is NOT required by Rule21 Standards.

This function is for maintenance personnel only, wrong operation will prevent the inverter from reaching maximum power.

6. P-factor (Not Required)

Description: Inverter will change power factor based on changing output power.

Note: This Setting is NOT required by Rule21 Standards.

This function is for maintenance personnel only, wrong operation will prevent the inverter from reaching maximum power.

6. Normal operation

7.VgWatt-UL (Not Required)

Description: Inverter will change the active output power based on voltage change.

Note: This Setting is NOT required by Rule21 Standards.

This function is for maintenance personnel only, wrong operation will prevent the inverter from reaching maximum power.

8. Enable both Volt-Var and Volt-Watt modes

Description: Rule21 requires both Volt-var and Volt-watt modes can be enabled.

To set both modes (Volt-var in high priority)

Step 1: Select and set Volt-watt mode at first.

Step 2: Enter "Working Mode" again and select and set Volt-var mode then.

Step 3: To check the priority, a new mode will appear as "V-Q & V-P" which indicates (Q) Volt-var is in high priority.

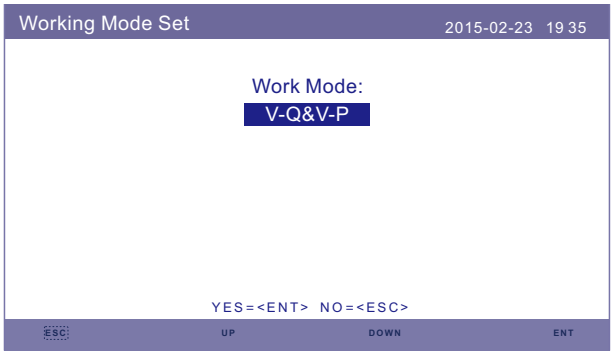

Figure 6.22 Working Mode set(1)

To set both modes (Volt-watt in high priority)

Step 1: Select and set Volt-var mode at first.

Step 2: Enter "Working Mode" again and select and set Volt-watt mode then.

Step 3: To check the priority, a new mode will appear as "V-P & V-Q" which indicates (P) Volt-watt is in high priority.

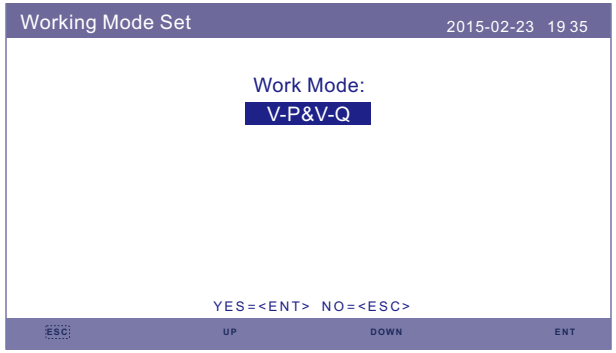

Figure 6.22 Working Mode set(2)

To reset dual-mode or exit the dual-mode situation

Step 1: Select "Null" mode at first.

Step 2: Enter "Working Mode" again. Redo above dual-mode setting steps to reset OR set other modes to exit dual-mode situation.

NOTE

To check the Volt-watt and Volt-var priority, simply enter the working modes.

V-Q&V-P indicates Volt-Var First V-P&V-Q indicates Volt-Watt First

6.7.9.2 Power Rate Limit

This function is used for change power Ramp-up rate. When inverters start up or input string MPPT changes, Inverter power ramp-up rate is limited in this menu.

The setting range from 5% to 600%, means inverter power change rate per minute.

Values are not allowed to change. If they are set, they may not conform to the UL 1741 SA standard.

6. Normal operation

6.7.9.3 Freq Derate Set

Mode 04 is used for UL 1741 SA frequency derating setting.

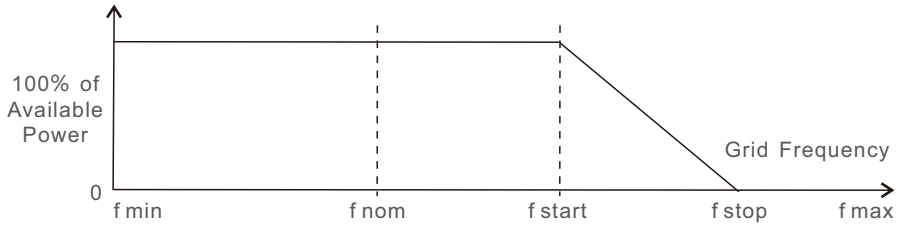

Figure 6.39 Mode 04 Freq-Watt characteristic

Over frequency load shedding F start range 59.936~60.036Hz,default setting 60.036Hz.

Descending rate: 5%Pn/0.1Hz.

F stop can set the range: 61-64Hz default setting 62Hz. Recovery rate: 5%Pn/0.1Hz.

Mode 08 is used for Rule21 Freq-Watt setting.

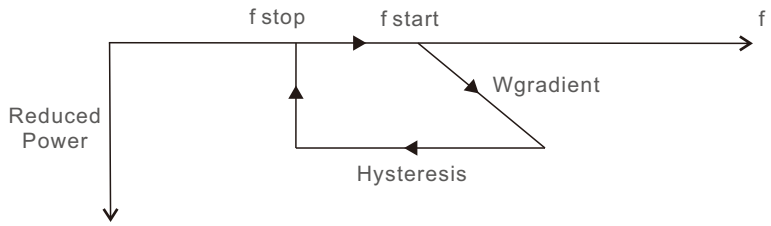

Figure 6.40 Mode 08 Freq-Watt characteristic

Start Freq: This is the frequency that active power reduction starts.

WGradient: This is the active power reduction rate in terms of the frequency.

Stop Freq: This is the frequency that stops the correction cycle.

Hysteresis: This indicates whether hysteresis is enabled.

This function is for maintenance personnel only, wrong operation will prevent the inverter from reaching maximum power.

6.7.9.4 10mins Voltage Set

This function is disabled and not used for the US.

> This function is applicable by maintenance personnel only, wrong operation will prevent the inverter from reaching maximum power.

6.7.9.5 Voltage PCC Set

Set the voltage at the PCC point.

This setting is required by RULE 21 requirements.

PCC: Point of Common Coupling, the point where a Local EPS is connected to an Area EPS.

> This function is applicable by maintenance personnel only, wrong operation will prevent the inverter from reaching maximum power.

6.7.9.6 Initial Settings

In initial settings it will reset each work mode back to default.

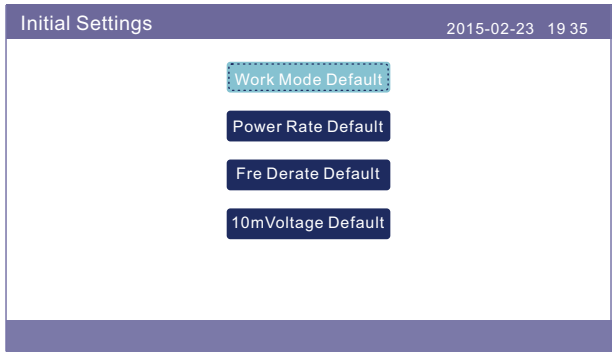

Figure 6.40 Initial Settings

6. Normal operation

6.7.10 External EPM set

This setting is for export power control. Please don't change settings in this item.

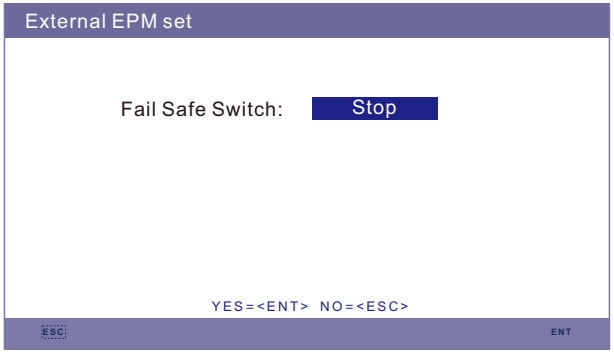

Figure 6.41 External EPM set

6.8 Arc fault current interrupt (AFCI) function

The Canadian Solar Three Phase inverter series can be supplied with an integrated AFCI module which can detect and interrupt a serial arc in the DC circuit(s). If an arc fault occurs, the AFCI module will detect the arc and interrupt the circuit. The fault can only be cleared manually.

An arc fault indicates an irregularity in the DC portion of the PV system. This could be a faulty PV panel, a bad DC connector or even a short circuit in the DC cabling. Check the entire DC portion of the system to ensure there is no evidence of an arc fault.

After confirming the DC portion of the array or effecting repairs of the array, press <ESC> for three (3) seconds, after which the inverter will restart. If the fault happens again, turn off and restart the inverter. If the fault still happens, contact Canadian Solar Support Service.

Figure 6.42 Arc fault

7. Maintenance

The Canadian Solar Three Phase series inverters do not require any regular maintenance. However, cleaning the dust off the heat sink will help dissipate heat away from the inverter, which will increase the life of the inverter.

CAUTION
Do not touch the surface when the inverter is operating. Some parts may be hot and cause burns. Turn OFF your inverter (refer to Section 6.2) and let it cool down before any maintenance or cleaning is performed on the inverter.

The status indicator lights and LCD cover can be cleaned with a soft cloth if they are too dirty to read.

NOTE
Never use any solvents, abrasives or corrosive materials to clean the inverter.

8. Troubleshooting

8.1 Current alarm – front LCD panel

8.1.1 Running messages

Running messages can be viewed in the LCD panel (refer to LCD operation in section 6.4).

8.2 Alarm history

8.2.1 Viewing alarm history

To view the last 10 (or less) alarm codes, refer to LCD Operation 6.6.1.

8.3 Error messages

NOTE
The first step to clearing alarms as listed in Table 9, is to reset the inverter. To reset the inverter, turn off the inverter (refer to Section 6.2) and wait for five (5) minutes before restarting it (refer to Section 6.1). If the failure persists, please first contact your local distributor and then Canadian Solar Support Service.
If you need to contact Canadian solar Support Service at
North, South & Central America Canadian Solar Inc.
Attn: Customer Service Department 3000 Oak Road, Suite 400
Walnut Creek, CA 94597
Tel: +1 855 315 8915
E-mail: service.ca@csisolar.com

Please have the following information available when contacting technical support:

1). Inverter serial number
2). The inverter distributor/dealer (if available)
3). Installation date
4). The description of problem (e.g., the alarm message displayed on the screen and the status of the screen status indicator lights. Other readings obtained from the Information sub menu (refer to Section 6.4) will also be helpful.)
5). PV array configuration (e.g. number of panels, panel capacity, number of strings, etc.)
6). Your contact details

8.3.1 Troubleshooting guide

Canadian Solar inverters are designed in accordance with international grid standards, safety standards and electromagnetic compatibility requirements. Before delivery to the customer, the inverter has been subjected to intensive testing to ensure its optimal operation and reliability.

In case of failure, the screen may display an alarm message, stop feeding energy into the grid or both. Typical failure descriptions and their corresponding alarm messages are listed in Table 9 on the following pages.

Alarms	Cause	Solution
No Information (Blank Screen)	• Input voltage low/missing • Polarity reversed • Main board damaged	**Test – DC switch OFF** • Check PV connections • Check polarity • Check voltage >120V Single, >350V three **Test – DC Switch ON** • Check voltage >120V Single, >350V three • If DC voltage is “0” replace inverter
Initializing (Inverter stuck in this mode)	• Inverter is waiting for driving signal	**Test – DC switch OFF** • Check PV connections • Check polarity • Check voltage >120V Single, >350V three **Test – DC Switch ON** • Check voltage >120V Single, >350V three • A cable may have been damaged or loosened in shipping replace inverter
OV-G-V: Over Grid Voltage	• Inverter detects grid voltage as too high	**Test – DC switch OFF** • Check AC at the inverter • If AC measures high, adjust upper limit with permission from utility **Test – DC Switch ON, full power** • Check AC at inverter test points • Compare with LCD • If AC measures high, cables between inverter and interconnect are too small • Check ampacity and voltage drop calculations
UN-G-V: Under Grid Voltage	• Inverter detects grid voltage as too low	**Test – DC switch OFF** • Check AC at the inverter test points • If AC measures low, adjust lower limit with permission from utility • Check LCD voltage reading, may be a bad measurement circuit **Test – DC Switch ON** • Check grid standard • Replace inverter

8. Troubleshooting

Alarms	Cause	Solution
OV-G-F: Over Grid Frequency	• Inverter detects grid Frequency as too high	**Test – DC switch OFF** • Check frequency at the inverter test points • If Frequency measures high, adjust upper limit with permission from utility • Check LCD reading, may be a bad measurement circuit **Test – DC Switch ON** • Check grid standard • Replace inverter
NO-GRID	• Inverter does not detect the grid	**Test – DC switch OFF** • Check AC at the inverter test points • L-L, L-GND • Do NOT tell me 240VAC • Check LCD reading, may be a bad measurement circuit **Test – DC Switch ON** • Check grid standard • Replace inverter
OV-DC: DC voltage is too high	• Inverter detects High DCV	**Test – DC switch OFF** • Check DC at the inverter test points • If DCV is high, too many panels in the string **Test – DC Switch ON** • Check LCD reading, may be a bad measurement circuit • Replace inverter
OV-BUS: DC BUS voltage is too high	• Inverter detects High DCV on internal bus	**Test** • Measure DC and AC voltages • Compare with LCD • Replace inverter • Internal damage • Wire came loose during shipping
UN-BUS: DC BUS voltage is too low	• Inverter detects low DCV on internal bus	**Test** • Measure DC and AC voltages • Compare with LCD • Replace inverter • Internal damage • Wire came loose during shipping

8. Troubleshooting

Alarms	Cause	Solution
GRID-INTF: Grid unstable	• Inverter detects grid instability, internal fault current high	**Test – With DC Switch OFF** • Measure AC voltage • Test AC line for THD • Test – With DC Switch ON **Test AC line for THD** • Multiple inverters/turn one off • Impedance matching adjustment or box • Internal damage • Wire came loose in shipping
INI-FAULT: Initialization Protection	• Master and Slave DSP have different values	**Reset Inverter** • DC switch OFF • Wait until all lights/LCD turn off • DC switch ON • Replace inverter
OV-TEM: Temperature Protection	• Inverter detects high ambient temperature >60C	**Inspect installation** • Check heatsink for obstructions/ventilation • Is inverter in direct sunshine • Measure ambient temperature near inverter • If temp is in range replace inverter
PV ISO-PRO 01/02: Ground Protection	• Inverter detects low DC insulation resistance	**Inspect installation** • Reset inverter • Note weather conditions when alarm occurs • Measure insulation resistance • If normal, measure in SAME weather as alarm • Physically check cables • Replace inverter
ARC-FAULT	• Inverter detects arc in DC circuit	**Inspect installation** • Check cable with string tester • Physically check cables • Inspect panel junction boxes • Inspect cable connections • Reset inverter • Replace inverter
Screen OFF with DC applied	• Inverter internally damaged	• Do not turn off the DC switches as it may damage the inverter. • Please wait for sunset and confirm the string current is less than 0.5A with a clip-on ammeter and then turn off the DC switch. String current above 0.5A is under load. • Note: Damage due to wrong connections or fire caused by removing string wires or opening fuse holders under load is not covered in the device warranty.

Table 8.1 Fault messages and descriptions

9. Specifications

Model	CSI-25K-T480GL01-UB
DC Values	
Max. DC input power (Watts)	37500
Max voltage (Volts)	1000
Rated Voltage (Volts)	700
Startup voltage (Volts)	350
Full power MPPT voltage range (Volts)	347-800
Operating MPPT voltage range (Volts)	200-800
Max usable input current (Amps)	72 (18 per MPPT)
Max short circuit input current (Amps)	112.4 (28.1 per MPPT)
MPPT number/Max input strings number	4/8
AC Values	
Nominal output power (Watts)	25000
Max. apparent output power (VA)	25000
Max. continuous output power (Watts)	25000
Nominal grid voltage (Volts)	480
Operating voltage range (Volts)	422.4-528
Nominal grid frequency (Hertz)	60
Operating frequency range (Hertz)	59.5-60.5
Operating phase	3/PE
Max.output current (Amps)	30.1
Max. overcurrent protection device (Amps)	40
Max backfeed current (Amps)	0
DC Overvoltage Category (OVC)	II
AC Overvoltage Category (OVC)	III
Max output fault current (Amps) and duration (ms)	40/200
Output power factor range	0.8leading~0.8lagging
Grid current THD	<3%
DC injection current (mAmps)	<50
Efficiency	
Peak efficiency	98.6%
CEC weighted efficiency	98.3%
MPPT efficiency	>99.5%
Protection	
Integrated AFCI (DC arc-fault circuit protection)	Yes
Residual current monitoring	Yes

Model	CSI-25K-T480GL01-UB
General Data	
Surge protection	DC class II and AC class III(optional)
Dimensions(W*H*D)	21.1*45.9*14.1in (535*1167*358mm)
Weight (Inverter)	127lb (57.7kg)
Topology	Transformerless
Internal consumption	< 1W (Night)
Ambient operating temperature range	-25℃~60℃/-13℉~140℉
Storage Environment	-25℃~80℃/-13℉~176℉
Enclosure type	NEMA 4X
Noise emission (typical)	<30 dBA
Cooling concept	Natural convection
Max. operating altitude without derating	13120ft (4000m)
Designed lifetime	>20 years
Compliance	UL 1741, UL 1741SA, UL 1998, UL 1699B, IEEE 1547, FCC Part 15 (Class A & B), CAN/CSA C22.2 107.1-1,Rule 21 PhaesI, II&III
Operating surroundings humidity	0~100% Condensing
Features	
Interface	RS485, optional WiFi
Display	7.0"LCD color screen display
Warranty Terms	10 Years STD (Extendable to 20 Years)
Wiring Box	
Dimensions	20.8*21.3*9.5in (530*542*242mm)
Weight	26.4lb (12kg)
Enclosure type	NEMA 4X
Input string connections	8
Fuse rated current	20A
Surge protection	Type II
DC /AC wire sizes	12-6 AWG/8-2 AWG
Connections	4 knockout for 1.5" conduit at bottom and side. DC side Fuse terminal, AC side terminal block.

9. Specifications

Model	CSI-30K-T480GL01-UB
DC Values	
Max. DC input power (Watts)	45000
Max voltage (Volts)	1000
Rated Voltage (Volts)	700
Startup voltage (Volts)	350
Full power MPPT voltage range (Volts)	417-800
Operating MPPT voltage range (Volts)	200-800
Max usable input current (Amps)	72 (18 per MPPT)
Max short circuit input current (Amps)	112.4 (28.1 per MPPT)
MPPT number/Max input strings number	4/8
AC Values	
Nominal output power (Watts)	30000
Max. apparent output power (VA)	30000
Max. continuous output power (Watts)	30000
Nominal grid voltage (Volts)	480
Operating voltage range (Volts)	422.4-528
Nominal grid frequency (Hertz)	60
Operating frequency range (Hertz)	59.5-60.5
Operating phase	3/PE
Max.output current (Amps)	36.1
Max. overcurrent protection device (Amps)	50
Max backfeed current (Amps)	0
DC Overvoltage Category (OVC)	II
AC Overvoltage Category (OVC)	III
Max output fault current (Amps) and duration (ms)	50/200
Output power factor range	0.8leading~0.8lagging
Grid current THD	<3%
DC injection current (mAmps)	<50
Efficiency	
Peak efficiency	98.6%
CEC weighted efficiency	98.3%
MPPT efficiency	>99.5%
Protection	
Integrated AFCI (DC arc-fault circuit protection)	Yes
Residual current monitoring	Yes

Model	CSI-30K-T480GL01-UB
General Data	
Surge protection	DC class II and AC class III(optional)
Dimensions(W*H*D)	21.1*45.9*14.1in (535*1167*358mm)
Weight (Inverter)	127lb (57.7kg)
Topology	Transformerless
Internal consumption	< 1W (Night)
Ambient operating temperature range	-25℃~60℃/-13℉~140℉
Storage Environment	-25℃~80℃/-13℉~176℉
Enclosure type	NEMA 4X
Noise emission (typical)	<30 dBA
Cooling concept	Natural convection
Max. operating altitude without derating	13120ft (4000m)
Designed lifetime	>20 years
Compliance	UL 1741, UL 1741SA, UL 1998, UL 1699B, IEEE 1547, FCC Part 15 (Class A & B), CAN/CSA C22.2 107.1-1,Rule 21 PhaesI, II&III
Operating surroundings humidity	0~100% Condensing
Features	
Interface	RS485, optional WiFi
Display	7.0"LCD color screen display
Warranty Terms	10 Years STD (Extendable to 20 Years)
Wiring Box	
Dimensions	20.8*21.3*9.5in (530*542*242mm)
Weight	26.4lb (12kg)
Enclosure type	NEMA 4X
Input string connections	8
Fuse rated current	20A
Surge protection	Type II
DC /AC wire sizes	12-6 AWG/8-2 AWG
Connections	4 knockout for 1.5" conduit at bottom and side. DC side Fuse terminal, AC side terminal block.

9. Specifications

Model	CSI-36K-T480GL01-UB
DC Values	
Max. DC input power (Watts)	54000
Max voltage (Volts)	1000
Rated Voltage (Volts)	700
Startup voltage (Volts)	350
Full power MPPT voltage range (Volts)	500-800
Operating MPPT voltage range (Volts)	200-800
Max usable input current (Amps)	72 (18 per MPPT)
Max short circuit input current (Amps)	112.4 (28.1 per MPPT)
MPPT number/Max input strings number	4/8
AC Values	
Nominal output power (Watts)	36000
Max. apparent output power (VA)	36000
Max. continuous output power (Watts)	36000
Nominal grid voltage (Volts)	480
Operating voltage range (Volts)	422.4-528
Nominal grid frequency (Hertz)	60
Operating frequency range (Hertz)	59.5-60.5
Operating phase	3/PE
Max.output current (Amps)	43.3
Max. overcurrent protection device (Amps)	50
Max backfeed current (Amps)	0
DC Overvoltage Category (OVC)	II
AC Overvoltage Category (OVC)	III
Max output fault current (Amps) and duration (ms)	50/200
Output power factor range	0.8leading~0.8lagging
Grid current THD	<3%
DC injection current (mAmps)	<50
Efficiency	
Peak efficiency	98.6%
CEC weighted efficiency	98.3%
MPPT efficiency	>99.5%
Protection	
Integrated AFCI (DC arc-fault circuit protection)	Yes
Residual current monitoring	Yes

Model	CSI-36K-T480GL01-UB
General Data	
Surge protection	DC class II and AC class III(optional)
Dimensions(W*H*D)	21.1*45.9*14.1in (535*1167*358mm)
Weight (Inverter)	127lb (57.7kg)
Topology	Transformerless
Internal consumption	< 1W (Night)
Ambient operating temperature range	-25℃~60℃/-13℉~140℉
Storage Environment	-25℃~80℃/-13℉~176℉
Enclosure type	NEMA 4X
Noise emission (typical)	<30 dBA
Cooling concept	Natural convection
Max. operating altitude without derating	13120ft (4000m)
Designed lifetime	>20 years
Compliance	UL 1741, UL 1741SA, UL 1998, UL 1699B, IEEE 1547, FCC Part 15 (Class A & B), CAN/CSA C22.2 107.1-1,Rule 21 PhaesI, II&III
Operating surroundings humidity	0~100% Condensing
Features	
Interface	RS485, optional WiFi
Display	7.0"LCD color screen display
Warranty Terms	10 Years STD (Extendable to 20 Years)
Wiring Box	
Dimensions	20.8*21.3*9.5in (530*542*242mm)
Weight	26.4lb (12kg)
Enclosure type	NEMA 4X
Input string connections	8
Fuse rated current	20A
Surge protection	Type II
DC /AC wire sizes	12-6 AWG/8-2 AWG
Connections	4 knockout for 1.5" conduit at bottom and side. DC side Fuse terminal, AC side terminal block.

9. Specifications

Model	CSI-40K-T480GL01-UB
DC Values	
Max. DC input power (Watts)	54000
Max voltage (Volts)	1000
Rated Voltage (Volts)	700
Startup voltage (Volts)	350
Full power MPPT voltage range (Volts)	556-800
Operating MPPT voltage range (Volts)	200-800
Max usable input current (Amps)	72 (18 per MPPT)
Max short circuit input current (Amps)	112.4 (28.1 per MPPT)
MPPT number/Max input strings number	4/8
AC Values	
Nominal output power (Watts)	40000
Max. apparent output power (VA)	40000
Max. continuous output power (Watts)	40000
Nominal grid voltage (Volts)	480
Operating voltage range (Volts)	422.4-528
Nominal grid frequency (Hertz)	60
Operating frequency range (Hertz)	59.5-60.5
Operating phase	3/PE
Max.output current (Amps)	48.1
Max. overcurrent protection device (Amps)	60
Max backfeed current (Amps)	0
DC Overvoltage Category (OVC)	II
AC Overvoltage Category (OVC)	III
Max output fault current (Amps) and duration (ms)	60/200
Output power factor range	0.8leading~0.8lagging
Grid current THD	<3%
DC injection current (mAmps)	<50
Efficiency	
Peak efficiency	98.6%
CEC weighted efficiency	98.3%
MPPT efficiency	>99.5%
Protection	
Integrated AFCI (DC arc-fault circuit protection)	Yes
Residual current monitoring	Yes

Model	CSI-40K-T480GL01-UB
General Data	
Surge protection	DC class II and AC class III(optional)
Dimensions(W*H*D)	21.1*45.9*14.1in (535*1167*358mm)
Weight (Inverter)	127lb (57.7kg)
Topology	Transformerless
Internal consumption	< 1W (Night)
Ambient operating temperature range	-25℃~60℃/-13℉~140℉
Storage Environment	-25℃~80℃/-13℉~176℉
Enclosure type	NEMA 4X
Noise emission (typical)	<30 dBA
Cooling concept	Natural convection
Max. operating altitude without derating	13120ft (4000m)
Designed lifetime	>20 years
Compliance	UL 1741, UL 1741SA, UL 1998, UL 1699B, IEEE 1547, FCC Part 15 (Class A & B), CAN/CSA C22.2 107.1-1,Rule 21 PhaesI, II&III
Operating surroundings humidity	0~100% Condensing
Features	
Interface	RS485, optional WiFi
Display	7.0"LCD color screen display
Warranty Terms	10 Years STD (Extendable to 20 Years)
Wiring Box	
Dimensions	20.8*21.3*9.5in (530*542*242mm)
Weight	26.4lb (12kg)
Enclosure type	NEMA 4X
Input string connections	8
Fuse rated current	20A
Surge protection	Type II
DC /AC wire sizes	12-6 AWG/8-2 AWG
Connections	4 knockout for 1.5" conduit at bottom and side. DC side Fuse terminal, AC side terminal block.

10. Appendices

10.1 Appendix A

Part	Torque
AC Terminal	2.2 ft-lbs
DC Fuse Teminal	2.5 ft-lbs
Screw For Wiring Box Cover	1.3-1.4 ft-lbs
Ground Terminal	2.2 ft-lbs

Figure 10.1

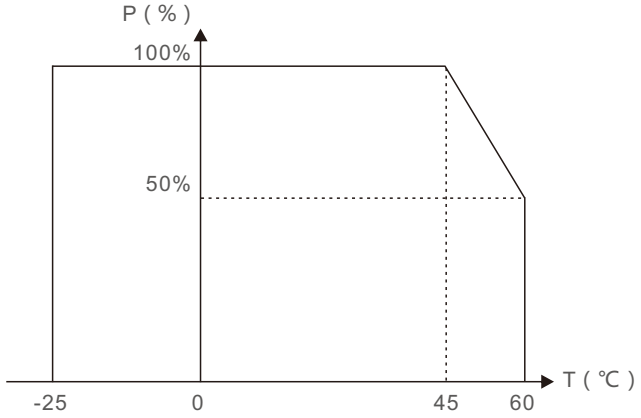

Figure 10.2 For all models of inverter

Comments:

A thermal sensor inside the inverter is calibrated to determine ambient temperature. All inverters will begin a sloped derate at 45C ending at 50% output power at 60C. Temperatures above 60C and below -25C will derate to 0% output power.

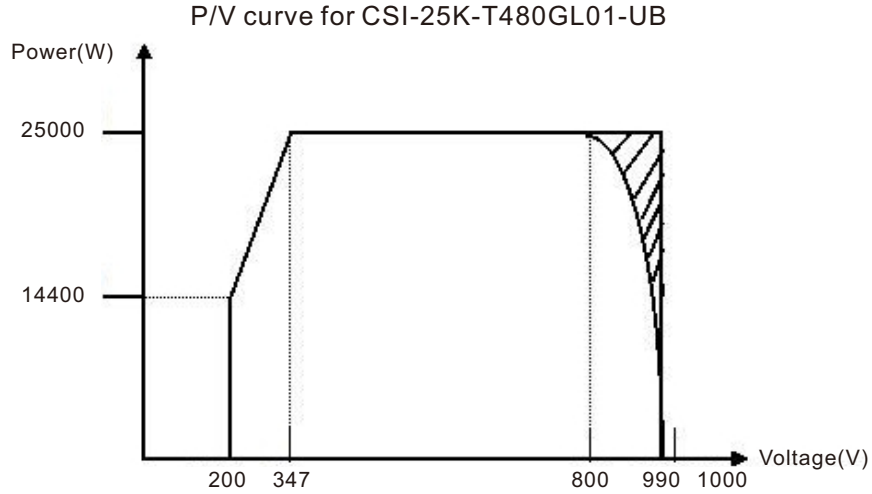

Figure 10.3 CSI-25K-T480GL01-UB Inverter output power by input voltage

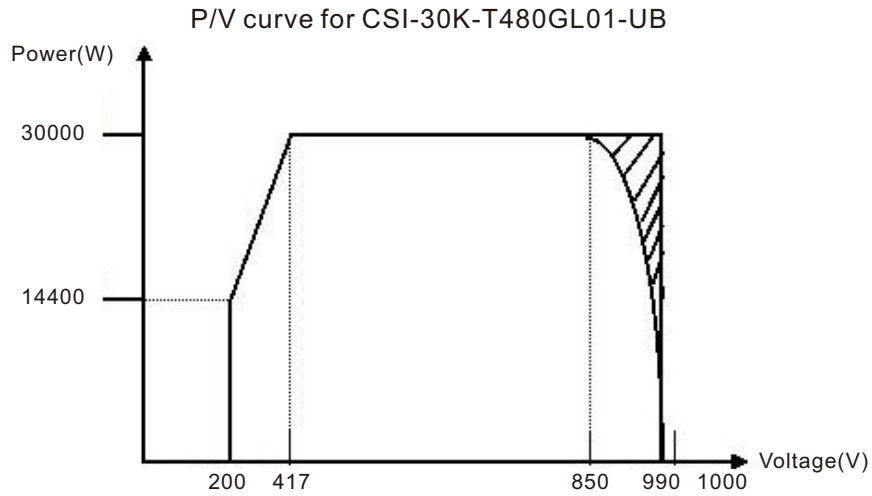

Figure 10.4 CSI-30K-T480GL01-UB Inverter output power by input voltage

10. Appendices

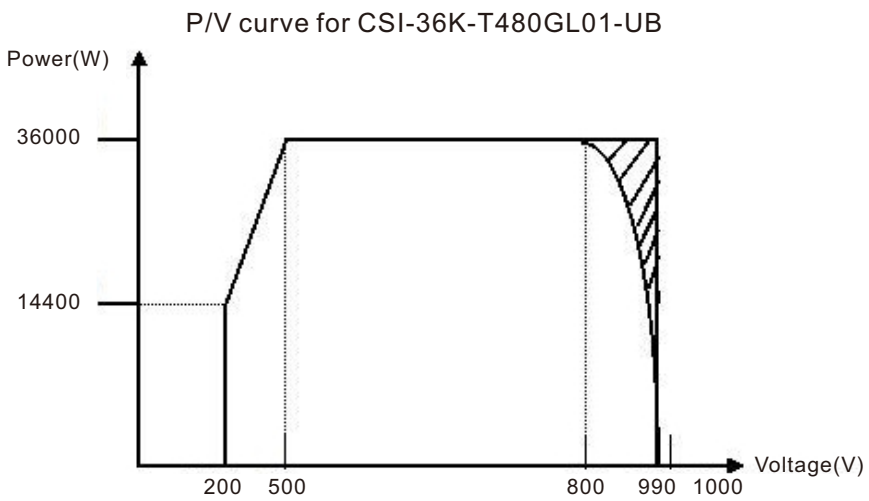

Figure 10.5 CSI-36K-T480GL01-UB Inverter output power by input voltage

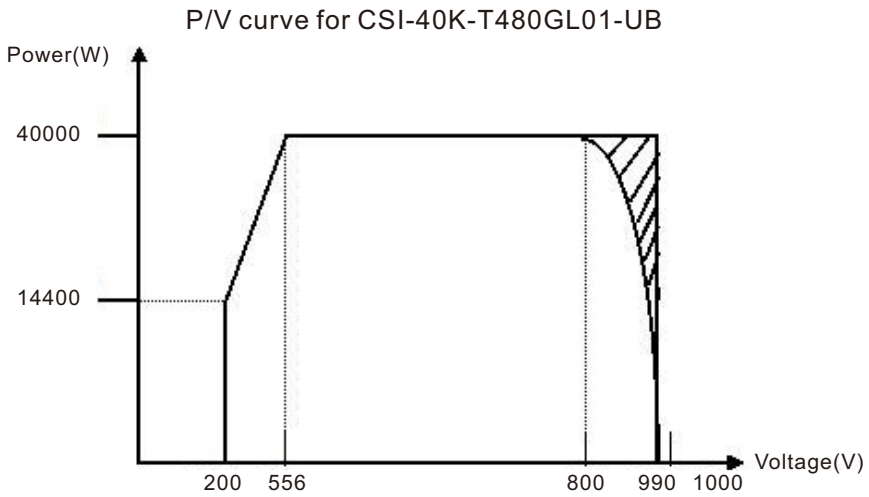

Figure 10.6 CSI-40K-T480GL01-UB Inverter output power by input voltage

PROJECT NAME _____

LOCATION _____ NUMBER _____

CanadianSolar

INSTALLATION AND COMMISSIONING CHECKLIST

3 PHASE STRING INVERTERS (KTL SERIES)

Warning: This checklist is not a replacement for the user manual.
Please read the user manual prior to inverter site selection and installation.

Step	No.	Content	Details	Values / Notes	Conclusion
INSTALLATION	1	Installation environment	Ensure installation site meets environmental and physical constraints.		[ ] Good [ ] Poor
	2	Unpacking	Check inverter condition after unpacking.		[ ] Good [ ] Poor
	3	Mounting bracket installation	Install inverter mounting bracket according to installation instructions in user manual. For allowable tilt angle refer to the installation manual.		[ ] Completed Record Tilt Angle in Notes
	4	Inverter installation	Carefully install the inverter to the mounting bracket and ensure it is firmly attached. Ensure the inverter has proper clearances and are properly ventilated.		[ ] Completed
	5	Serial number	Record the product serial numbers located on the side label.		Serial Numbers; attached list
	6	Solar modules	Confirm PV module installation completion. Record the total power of the PV modules.		[ ] Completed Record kWp in Notes
	7	DC input and AC output connection	Switch off the DC and AC distribution unit, connect DC to PV terminals of inverter, and connect AC to AC terminals of inverter. Ensure proper polarity and cable size. Torque to specifications.		[ ] Completed Record Torque in Notes
	8	PV voltage	Measure and record DC voltage. Ensure voltage and polarities are correct. Confirm the voltages are within 5% tolerance to what was tested.		[ ] Completed Record V_{DC} in Notes
	9	AC grid	Measure and record AC voltage and frequency. Confirm the VAC voltages are within 5% tolerance to what was tested.		[ ] Completed Record V_{AC} in Notes
	10	Grounding cable	Ensure ground cable is firmly attached to grounding lug.		[ ] Good [ ] Poor

CSIF-ST-016 A/0

Please return completed form to inverter.register@csisolar.com

PROJECT NAME _____

LOCATION _____ NUMBER _____

CanadianSolar

INSTALLATION AND COMMISSIONING CHECKLIST

3 PHASE STRING INVERTERS (KTL SERIES)

Warning: This checklist is not a replacement for the user manual.
Please read the user manual prior to inverter site selection and installation.

Step	No.	Content	Details	Values / Notes	Conclusion
COMMISSIONING	1	Communication cable (if function is used)	Connect the RS485 cable to the communication port.		[ ] Completed
	2	Supply DC / AC power	1. Switch the grid supply main Switch (AC) ON first. 2. Switch the DC switch ON. If the voltages of PV arrays are higher than start up voltage, the inverter will turn on. The red LED power will be continuously lit. 3. When both the DC and the AC sides supply to the inverter, it will be ready to generate power. Initially, the inverter will check both its internal parameters and the parameters of the AC grid, to ensure that they are within the acceptable limits. At the same time, the green LED will lash and the LCD displays the information of INITIALIZING.		[ ] Completed Record LEDs status in Notes

CSIF-ST-016 A/0

Please return completed form to inverter.register@csisolar.com

PROJECT NAME _____

LOCATION _____ NUMBER _____

CanadianSolar

INSTALLATION AND COMMISSIONING CHECKLIST

3 PHASE STRING INVERTERS (KTL SERIES)

Warning: This checklist is not a replacement for the user manual.
Please read the user manual prior to inverter site selection and installation.

Step	No.	Content	Details	Values / Notes	Conclusion
COMMISSIONING	3	Waiting time	After 60-300 seconds (depending on local requirement), the inverter will start to generate power. The green LED will be on continuously and the LCD displays the information of GENERATING.		[ ] Completed Record LEDs status in Notes
	4	Power generation	After grid connection, record power output of inverter.		[ ] Completed Record power in Notes
	5	Date & Time setting	Set the current date and time using the front panel interface.		[ ] Completed Record current date/time in Notes
	6	Communication setting (if avail.)	Set communication with a unique address for each inverter.		[ ] Completed Record address in Notes
	7	Machine version	For maintenance and reference, please record the irmware revisions if applicable.		[ ] Completed Record with serial numbers
	8	Operating parameter	Record operating parameters of the inverter. Verify IEEE1547 or UL1741 setting is selected. De-rate inverter and attach de-rate sticker as required.		[ ] Completed Record operating parameters in Notes
	9	Testing	Open and close the DC breaker to conirm whether the inverter reboots and shuts down automatically.		[ ] Reboot successful [ ] Not rebooting
	10	Completion	Installation and commissioning is complete if no abnormality.		[ ] Good [ ] Issues detected

CSIF-ST-016 A/0

Please return completed form to inverter.register@csisolar.com

PROJECT NAME _____

LOCATION _____ NUMBER _____

CanadianSolar

INSTALLATION AND COMMISSIONING CHECKLIST

3 PHASE STRING INVERTERS (KTL SERIES)

Warning: This checklist is not a replacement for the user manual.
Please read the user manual prior to inverter site selection and installation.

System Owner: _____

Address / Location: _____

Inverter model: _____

Number of inverters: _____ Inverter mounting tilt: _____

Output power*: _____ Input DC voltage: _____

Grid: V Max: _____ V Min: _____ Frequency Max: _____ Min: _____

Coniguration: MPPT Individual _____ MPPT Parallel _____

Monitoring: RS485: _____ Ethernet: _____

PV module manufacturer: _____ PV model: _____

DC cable size: _____ AC cable size: _____

Number of series connected modules in PV strings: _____

Number of PV strings in parallel per MPPT: _____

Total System size (DC Watts): _____

Note site typical arrangements and variances

Inverter irmware revision: DSP: _____ LCD: _____

Insulation limit (K): _____ PV start-up voltage: _____

Reactive compensation: _____ +/- PF

Monitoring equipment and supplier: _____

Transformer ratings, supplier: _____

*Specify de-rated power and add nameplate power in parenthesis

GENERAL COMMENTS / OBSERVATIONS:

_____

_____

_____

_____

_____

_____

CSIF-ST-016 A/0

Please return completed form to inverter.register@csisolar.com

PROJECT NAME _____

LOCATION _____ NUMBER _____

CanadianSolar

INSTALLATION AND COMMISSIONING CHECKLIST

3 PHASE STRING INVERTERS (KTL SERIES)

Warning: This checklist is not a replacement for the user manual.
Please read the user manual prior to inverter site selection and installation.

Inverter serial numbers:

1 ----------
2 ----------
3 ----------
4 ----------
5 ----------
6 ----------
7 ----------
8 ----------
9 ----------
10 ----------
11 ----------
12 ----------
13 ----------
14 ----------
15 ----------
16 ----------
17 ----------
18 ----------
19 ----------
20 ----------
21 ----------
22 ----------
23 ----------
24 ----------
25 ----------
26 ----------
27 ----------
28 ----------
29 ----------
30 ----------
31 ----------
32 ----------
33 ----------
34 ----------
35 ----------
36 ----------
37 ----------
38 ----------
39 ----------
40 ----------
41 ----------
42 ----------

INSTALLER´S NAME _____ COMPANY _____

INSTALLER´S SIGNATURE _____ DATE _____

CSIF-ST-016 A/0

Please return completed form to inverter.register@csisolar.com